Declassified in Part - Sanitized Copy Approved for Release 2011/12/14 : CIA-RDP80T00246A064200070001-1

50X1-HUM

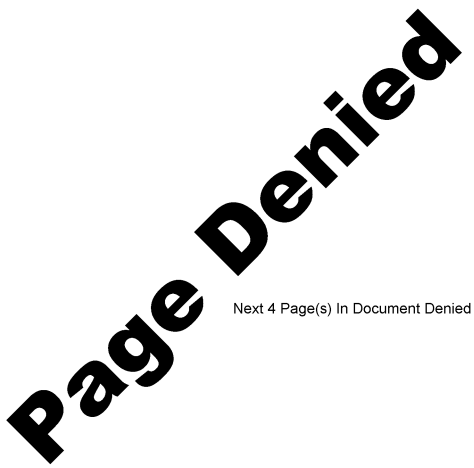

Next 4 Page(s) In Document Denied

Declassified in Part - Sanitized Copy Approved for Release 2011/12/14 : CIA-RDP80T00246A064200070001-1

Declassified in Part - Sanitized Copy Approved for Release 2011/12/14 : CIA-RDP80T00246A064200070001-1

50X1-HUM

AN-12 AIRCRAFT
TECHNICAL DESCRIPTION

Book III

Instruments. Oxygen Equipment. Photographic Equipment. Radio Equipment. Aircraft Bonding. Electrical Equipment.

Declassified in Part - Sanitized Copy Approved for Release 2011/12/14 : CIA-RDP80T00246A064200070001-1

Declassified in Part - Sanitized Copy Approved for Release 2011/12/14 : CIA-RDP80T00246A064200070001-1

AN-12 aircraft technical description consists of the following three books:

BOOK I - General. Technical data. Aerodynamic and flight data. Load distribution and C.G. data. Cargo handling equipment. Armament.

BOOK II - Aircraft design. Powerplant. Hydraulic system. Air-conditioning and pressurization equipment; hot-air anti-icing system. Ground support equipment.

BOOK III - Instruments. Oxygen equipment. Photographic equipment. Radio equipment. Aircraft bonding. Electrical equipment.

Declassified in Part - Sanitized Copy Approved for Release 2011/12/14 : CIA-RDP80T00246A064200070001-1

Declassified in Part - Sanitized Copy Approved for Release 2011/12/14 : CIA-RDP80T00246A064200070001-1

SECTION I

INSTRUMENTS

1. Instrument Panels and Consoles

The main flight and navigation instruments are arranged in the forward pressure cabin on the pilots' and navigator's instrument panels.

Instrument panels are also located in the aft cabin at the gunner's station and in the cargo cabin for the attendants' or the paratroop officer.

The pilots', navigator's, gunner's and attendant's panels are made of duralumin sheet and have beaded edging for greater rigidity. The face sides of the panels are coated with black frost varnish.

The instrument panels are bonded by means of flexible strips.

All the instruments are attached to the panels with the help of standard mounting rings and flanges.

To facilitate the use of instruments by the crew there are placards on the instrument panels indicating the designation of the instruments, besides which operating limits are marked on the cover-glass or some instrument dials. For night flights the dials of instruments are illuminated with white and U.V. lights.

The general arrangement of the pilots', navigator's and gunner's cockpits is shown in Figs. 2 and 3.

To facilitate mounting and removing of the instruments the panels are hinged. To swing the panel down, it is necessary to remove two screws at the top attachment points. The panel is fixed in the down position by restricting chains.

Declassified in Part - Sanitized Copy Approved for Release 2011/12/14 : CIA-RDP80T00246A064200070001-1

Declassified in Part - Sanitized Copy Approved for Release 2011/12/14 : CIA-RDP80T00246A064200070001-1

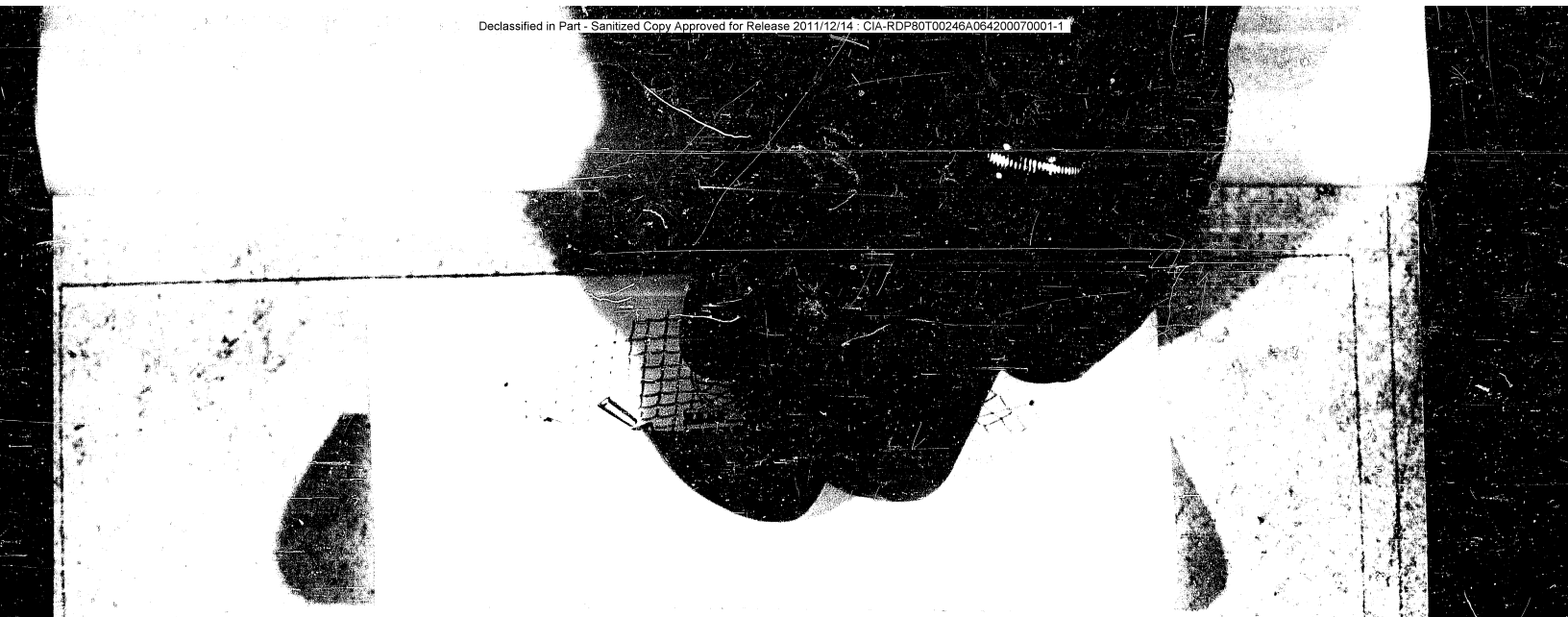

Fig. 1 Cockpit arrangement.

1-flight engineer's seat; 2-УРТ-1 fine voltage regulator box; 3-static pressure ports heating; 4-L.G. doors distribution box; 5-pilot's console; 6-thermos containers; 7-oxygen mask bag; 8-КП-24М oxygen regulator; 9-barometric system selector valves; 10-first-aid; 11-navigation lights control panel; 12-СПУ-7 intercommunication subset; 13-trim-tab control panel; 14-control column; 15-pilot's instrument panel; 16-ИИ-13 magnetic compass; 17-pilot's center instrument panel; 18-copilot's instrument panel; 19-СП-1 periscopic sextant; 20-pilot's overhead control panel; 21-copilot's seat; 22-КП-24М oxygen regulator; 23-СВБ-70 medium wave units (1-РСБ-70 radio set); 24-copilot's console; 25-1-РСБ-70 transmitter; 26-d-o power system control panel; 27-a-c power system control panel; 28-РПК receiver; 29-УС-3 universal superheterodyne control panel; 30-РСБ-5 tuning indicators; 31-СПУ-7 interphone subset; 32-1-РСБ-70 key; 33-РСБ-5 key; 34-radio operator's desk; 35-РСБ-5 power unit; 36-РПК supply units; 37-1-РСБ-70 radio set dynamotor model У-600; 38-radio operator's seat; 39-navigator's seat; 40-flight engineer's oxygen control panel; 41-ССП-2А fire extinguishing system test panel.

Declassified in Part - Sanitized Copy Approved for Release 2011/12/14 : CIA-RDP80T00246A064200070001-1

Declassified in Part - Sanitized Copy Approved for Release 2011/12/14 : CIA-RDP80T00246A064200070001-1

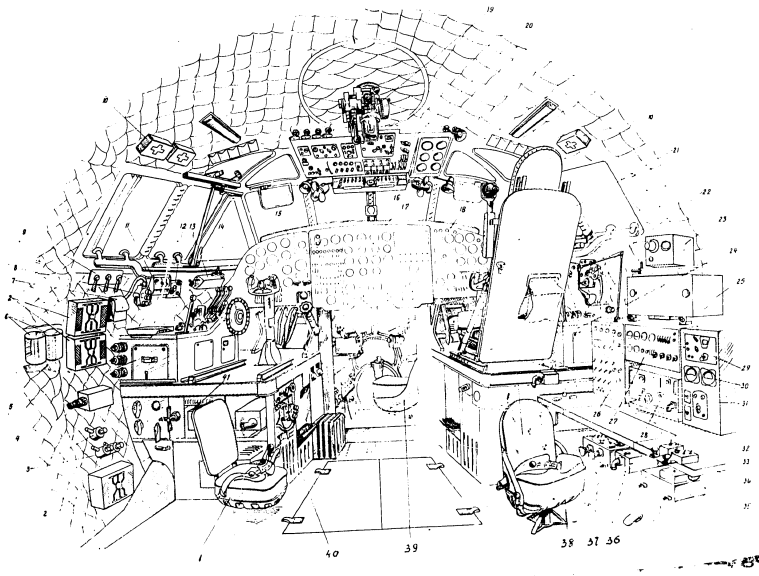

1-flight engineer's se... ...rts mating; 4-L.G. doors distributi... ...gen mask bag; 5-КП-24М oxygen regulator; 9-barometric system selector valves; 10-first-aid; 11-navigation lights control panel; 12-СПУ-7 intercommunication subset; 13-trim-tab control panel; 14-control column; 15-pilot's instrument panel; 16-КИ-13 magnetic compass; 17-pilot's center instrument panel; 18-copilot's instrument panel; 19-СП-1 periscopic sextant; 20-pilot's overhead control panel; 21-copilot's seat; 22-КП-24М oxygen regulator; 23-СВВ-70 medium wave units (1-РСБ-70 radio set); 24-copilot's console; 25-1-РСБ-70 transmitter; 26-d-o power system control panel; 27-a-c power system control panel; 28-РПК receiver; 29-УС-3 universal superheterodyne control panel; 30-РСБ-5 tuning indicators; 31-СПУ-7 interphone subset; 32-1-РСБ-70 key; 33-РСБ-5 key; 34-radio operator's desk; 35-РСБ-5 power unit; 36-РПК supply units; 37-1-РСБ-70 radio set dynamotor model У-600; 38-radio operator's seat; 39-navigator's seat; 40-flight engineer's oxygen control panel; 41-ССП-2А fire extinguishing system test panel.

Declassified in Part - Sanitized Copy Approved for Release 2011/12/14 : CIA-RDP80T00246A064200070001-1

Declassified in Part - Sanitized Copy Approved for Release 2011/12/14 : CIA-RDP80T00246A064200070001-1

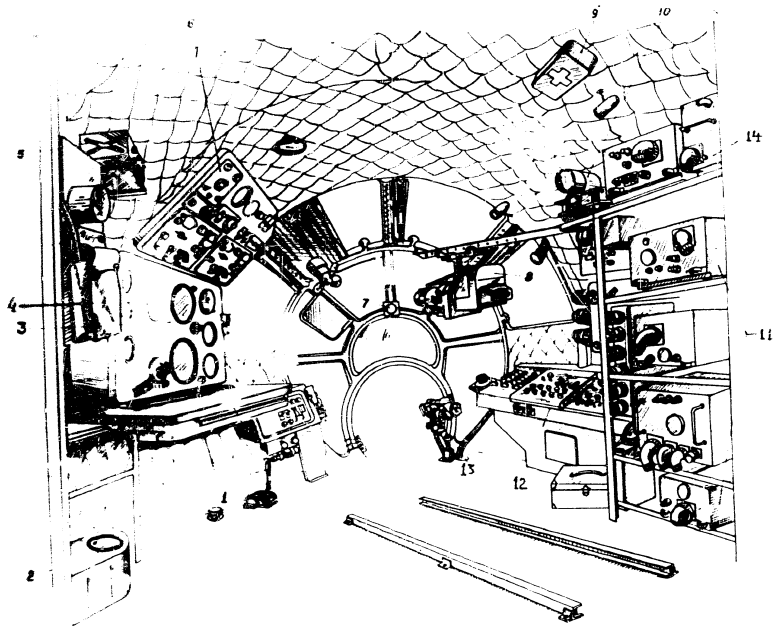

Fig. 2 Navigator's cabin arrangement.

1-navigator's table; 2-ПМК-52 direction gyro; 3-navigator's instrument panel; 4-oxygen mask bag; 5-ДАК-ДБ-5 remote-control astro-compass computer; 6-navigator's overhead control panel; 7-КИ-13 magnetic compass; 8-РБП-3 set P.P.I.; 9-first-aid; 10-ИВ-50БМ true airspeed data unit; 11-РБП-3 panoramic radar units; 12-navigator's control rack (stbd.); 13-НКПБ-7 bomb sight; 14-ГРП-2 glide slope receiver.

Declassified in Part - Sanitized Copy Approved for Release 2011/12/14 : CIA-RDP80T00246A064200070001-1

Declassified in Part - Sanitized Copy Approved for Release 2011/12/14 : CIA-RDP80T00246A064200070001-1

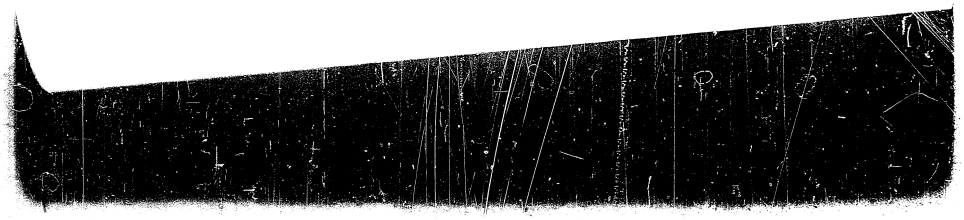

Fig. 3 Gunner's cabin arrangement.

1-gunner's seat; 2-thermos container; 3-АП-27 automatic gun recharger; 4-АПД-54г automatic pressure governor; 5-oxygen regulator; 6-oxygen control panel; 7-interphone equipment bag; 8-СПУ-7 interphone reset; 9-automatic interrupter junction box; 10- ПЭ[illegible]-45 relay junction box; 11-gunner's electrical panel; 12-first-aid; 13-"СУ" fire extinguisher; 14-gunner's instrument panel; 15-gunner's cabin distribution box; 16-ВС-45 altitude signal unit; 17-С-1 warning horn; 18-КПС-5,А sight; 19-СП-54Т control panel; 20-СП-54У auxiliary panel; 21-СП-1 and ЭВ-46 fuses box; 22-КЭП-4 ammunition booster junction box; 23-АП-27 automatic recharger; 24-circuit breaker; 25- У-2К-1 amplifier; 26-КУК-54В tail gun-installation control box; 27-urinal.

Declassified in Part - Sanitized Copy Approved for Release 2011/12/14 : CIA-RDP80T00246A064200070001-1

Declassified in Part - Sanitized Copy Approved for Release 2011/12/14 : CIA-RDP80T00246A064200070001-1

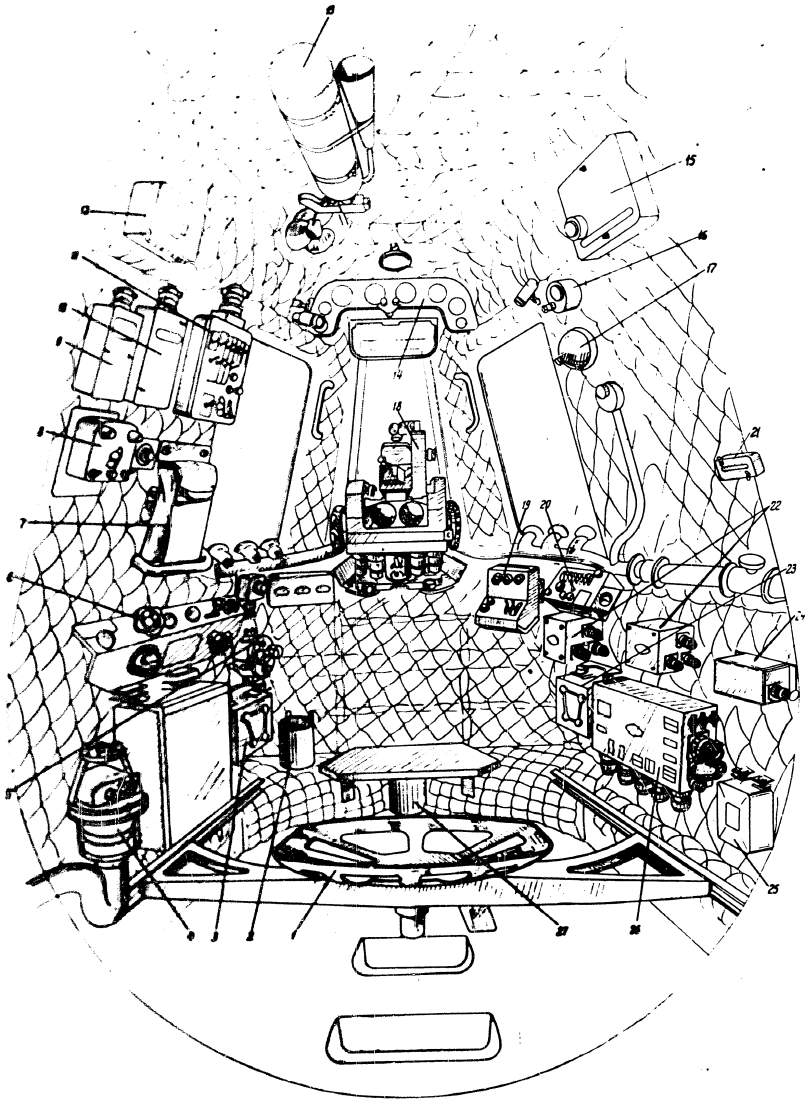

control box; 27-urinal.

Declassified in Part - Sanitized Copy Approved for Release 2011/12/14 : CIA-RDP80T00246A064200070001-1

Declassified in Part - Sanitized Copy Approved for Release 2011/12/14 : CIA-RDP80T00246A064200070001-1

3

The Pilots' Instrument Panel

The pilots' instrument panel consists of three separate panels: the left (pilot's), center, and the right (co-pilot's).

The panels are attached to the pedals mount and the antiglare shield.

Each panel is mounted on six standard 271c49 shock absorbers (four lower and two upper ones).

Power is supplied to the instrument units through plug connectors mounted behind the panels on Fr. No.4.

The instrument panels should be mounted vertically with a $\pm 1^{\circ}$ tolerance when the aircraft is in line-of-flight position.

Instruments installed on the pilot's instrument panel

No.	Description	Type or mark	Units per assy
1	2	3	4
1.	Emergency battery switches	В-45	1
		2В-45	1
2.	СД-1М range finder indicator	ПРД-50	1
3.	Accelerometer	АМ-10	1
4.	" Speed too high" warning lamp (red)	СЛЦ-5I	1
5.	Windscreen heating switch	В-45	1
6.	Rate-of-climb indicator	ВАР-30-3	1
7.	РВ-2 radio altimeter indicator	ПРВ-46	1
8.	Fuel quantity remaining warning lamps (yellow- indicates fuel remaining for sixty minutes' flight, and red - for fifteen minutes' flight)	СЛЦ-5I	2

Declassified in Part - Sanitized Copy Approved for Release 2011/12/14 : CIA-RDP80T00246A064200070001-1

Declassified in Part - Sanitized Copy Approved for Release 2011/12/14 : CIA-RDP80T00246A064200070001-1

1	2	3	4
9.	RLS indicator	ПСП-48	1
10.	УРП-56П marker beacon receiver		
	signal lamp (white)	СМН-5I	1
11.	Compass indicator	ЭК-4 (ГПК-1 set)	1
12.	ГИК-1 compass synchronizing button	5-КС	1
13.	"Entrance doors, side doors and escape hatch open" warning lamps(red)	СМН-5I	2
14.	ГПК-52 directional gyro	ПМК-49	1
15.	Air speed indicator	КУС-1200	1
16.	Altimeter	ВД-10	1
17.	Attitude indicator (L.H. - main, R.H. - stand-by)	АГБ-2	2
18.	Turn-and-slip indicator	ЭУП-53	1
19.	"Photoflash bombs tactical drop" signal lamp (green)	СМН-5I	1
20.	"Photoflash bomb emergency drop" signal lamp(red)	СМН-5I	1
21.	Machmeter	МС-I	1
22.	Cargo doors position signal lamps (green - for open position, red - for closed position)	СМН-5I	2
23.	АРК-5 No.1 ADF indicator	СУП-7	1
24.	АРК-5 No.2 ADF indicator	СУП-7	1
25.	Front wheel steering signal lamp (yellow)	СМН-5I	1
26.	Cargo emergency drop signal lamps (red)	СМН-5I	1

Declassified in Part - Sanitized Copy Approved for Release 2011/12/14 : CIA-RDP80T00246A064200070001-1

Declassified in Part - Sanitized Copy Approved for Release 2011/12/14 : CIA-RDP80T00246A064200070001-1

1	2	3	4
9.	ILS indicator	ПСП-48	1
10.	МРП-56П marker beacon receiver		
	signal lamp (white)	СМН-5I	1
11.	Compass indicator	УК-4 (ГИК-I set)	1
12.	ГИК-I compass synchronizing button	5-КС	1
13.	"Entrance doors, side doors and escape hatch open" warning lamps(red)	СМН-5I	2
14.	ГПК-52 directional gyro	ПГК-49	1
15.	Air speed indicator	КУС-I200	1
16.	Altimeter	ВД-10	1
17.	Attitude indicator (L.H. - main, R.H. - stand-by)	АУБ-2	2
18.	Turn-and-slip indicator	ЭУП-53	1
19.	"Photoflash bombs tactical drop" signal lamp (green)	СМН-5I	1
20.	"Photoflash bomb emergency drop" signal lamp(red)	СМН-5I	1
21.	Machmeter	МС-I	1
22.	Cargo doors position signal lamps (green - for open position, red - for closed position)	СМН-5I	2
23.	АРК-5 No.1 ADF indicator	СУП-7	1
24.	АРК-5 No.2 ADF indicator	СУП-7	1
25.	Front wheel steering signal lamp (yellow)	СМН-5I	1
26.	Cargo emergency drop signal lamps (red)	СМН-5I	1

Declassified in Part - Sanitized Copy Approved for Release 2011/12/14 : CIA-RDP80T00246A064200070001-1

Declassified in Part - Sanitized Copy Approved for Release 2011/12/14 : CIA-RDP80T00246A064200070001-1

1	2	3	4
27.	Cargo emergency drop switch	2B-45	1
28.	"Active-Passive" cargo emergency drop switch	B-45	1
29.	"Photoflash bomb emergency drop" switch	2B-45 MM-45	1 1
30.	"Photoflash bomb emergency drop" switch with positions "Armed-Unarmed"	2B-45	1
31.	"Emergency colour flares drop" switch	2B-45	1
32.	ГИК-1 induction compass switch	3B-20	1
33.	ЭУП-53 turn-and-slip indicator switch	B-45	1
34.	АГБ-2 attitude indicator switch	3B-20	1

Instruments Located on the Pilots' Center Instrument Panel

No.	Description	Type or mark	Units per assay
1	2	3	4
1.	Anti-skid control switch	B-45	1
2.	Anti-skid control signal lamps (yellow)	[illegible]-31	2
3.	Fire-extinguishing system main switch	[illegible]	1
4.	Aircraft clock	АЧК	1
5.	Dual pointer fuel valve lever position indicator	УЛТ-3	2

Declassified in Part - Sanitized Copy Approved for Release 2011/12/14 : CIA-RDP80T00246A064200070001-1

Declassified in Part - Sanitized Copy Approved for Release 2011/12/14 : CIA-RDP80T00246A064200070001-1

1	2	3	4
6.	"Propeller lock release" signal lamps (red)	СЛЦ-51	4
7.	Dual-pointer tachometers	ИТЭ-2	2
8.	[illegible] sequence switch	ППН-45	1
9.	[illegible] operation signal panel	Mfg item	1
10.	[illegible] control units	АЗР-[illegible]	7
		В-45	2
		ПП-45	1
		2ПП-250	4
11.	[illegible] button-lamps		6
12.	[illegible] pipe temperature indicators	ТВГ-2	4
13.	[illegible] extinguishing system switch	204-КС	2
14.	[illegible] switches	5КС	5
15.	[illegible] operation signal lamps labeled "extinguishers" (yellow)	СЛЦ-51	6
16.	[illegible] fuel pressure, oil pressure and oil temperature [illegible]	УИЗ-3	4
17.	"[illegible] valves open" signal [illegible]	СЛЦ-51	4
18.	[illegible] indicators	УИ1-100	4
19.	[illegible]	В-1	1
20.	[illegible] fuel pressure indicator	УИ2-3	2
21.	[illegible] switch	2В-45	1
22.	[illegible]	5КС	1

Declassified in Part - Sanitized Copy Approved for Release 2011/12/14 : CIA-RDP80T00246A064200070001-1

Declassified in Part - Sanitized Copy Approved for Release 2011/12/14 : CIA-RDP80T00246A064200070001-1

1	2	3	4
23.	Autopilot control panel	(АП-28Д set)	1
24.	L.H., R.H. and FWD landing lights control switches	ПНН-45	3
25.	Landing light switches	ПНН-45	3
26.	Purging system switch	ППН-45	1
27.	Fuel flow indicator	РТМС-1,2--Б1	4
28.	СЭМС-260В fuel quantity gauge	СЭТС	1
29.	Fuel gauge selector switch	ПГ-8	1
30.	"Fuel to hydraulic system" [redacted] switch	В-45	1
31.	Brakes pressure gauges	УИ2-150	2
32.	Hydraulic system pressure gauges	УИ1-240	3
33.	Dual-pointer hydraulic fluid quantity indicator for right-hand and left-hand tanks	МЭ-1696	1
34.	Flap-position indicator	УЗП-1	1
35.	L.G. extension-retraction, flaps and L.G. doors-position signal panel	ШПС-2В	1
36.	"Main L.G. doors open" warning light (red)	СЦШ-5I	1
37.	Oil quantity gauge	МЭС-1687В	1
38.	Oil quantity gauge selector switch	П-8	1
39.	Oil remaining warning light (red)	СЦШ-5I	4

Declassified in Part - Sanitized Copy Approved for Release 2011/12/14 : CIA-RDP80T00246A064200070001-1

Declassified in Part - Sanitized Copy Approved for Release 2011/12/14 : CIA-RDP80T00246A064200070001-1

1	2	3	4
40.	Oil cooler shutters control switches	П2НПН-45	4
41.	Four-pointer oil cooler shutters position indicator	УКЗ-4	1
42.	Stop valves control switches	ПП-45	4
43.	Oil cooler ejector valve switches	2ПП-45	4
44.	Neutral gas heating switch	2ППН-45	1

Instruments located on the co-pilot's instrument panel

No.	Description	Type or mark	Units per assy
1	2	3	4
1.	АГБ-2 attitude indicator	В-45	1
2.	ЭУП-53 turn-and-slip indicator switch	В-45	1
3.	АРД-54 automatic pressure regulator switch with "Military" and "Normal" positions	В-45	1
4.	Crew cabin air temperature regulator switch	П2НПН-45	1
5.	Cooling turbine switch	2ПП-45	1
6.	FWD cabin pressure air and FWD cabin air thermometers	2ТУЭ-III	1
7.	"Speed too high [redacted] warning lamp (red)	СЛП-5I	1
8.	Air speed indicator	КУС-1200	1
9.	РВ-2 radio altimeter indicator	ПРВ-46	1
10.	Fuel quantity remaining warning lamps (yellow lamp indicates fuel remaining for 60 minutes' flight, red - for 15 minutes' flight)	СЛП-5I	2

Declassified in Part - Sanitized Copy Approved for Release 2011/12/14 : CIA-RDP80T00246A064200070001-1

Declassified in Part - Sanitized Copy Approved for Release 2011/12/14 : CIA-RDP80T00246A064200070001-1

1	2	3	4
11.	Altimeter	ВД-40	1
12.	МРП-56п marker beacon receiver signal lamp (white)	СШ-5I	1
13.	ILS indicator	ПСП-48	1
14.	ГИК-I induction compass indicator	УК-4	1
15.	ГИК-I compass synchronizing button	5КС	1
16.	Ambient air thermometers	ТНВ-1 (ТНВ.45 set)	1
17.	Tail unit heating signal lamp (blue)	СШ-5I	1
18.	Wing icing warning lamp (red)	СШ-5I	1
19.	Engine inlet guide vanes icing warning lamps (red)	СШ-5I	4
20.	Rate-of-climb indicator	ВАР-30-3	1
21.	Attitude indicator	АГБ-2	1
22.	Altitude in cabin - and - differential pressure indicator	УВШ-15	1
23.	ЭУП-53 turn-and-slip indicator	ЭУП-53	1
24.	PWB pressure cabin air flow indicator	УРВК	1
25.	ГИК-52 directional gyro indicator	ПИК-49	1
26.	Liquid oxygen quantity gauge	ДУЖК-У	1
27.	АРК-5 ADF indicators (No.1, upper and No.2, lower)	СУП-7	2
28.	Liquid oxygen quantity gauge switch	2МП-250	1
29.	Engine inlet guide vanes icing warning light switch	В-45	1

Declassified in Part - Sanitized Copy Approved for Release 2011/12/14 : CIA-RDP80T00246A064200070001-1

Declassified in Part - Sanitized Copy Approved for Release 2011/12/14 : CIA-RDP80T00246A064200070001-1

1	2	3	4
30.	Wing de-icing system signal lamps (green)	СМ-52	4
31.	Pitot tubes heating signal panel	Mfg item	1
32.	Windscreen heating switch	B-45	1
33.	Propellers and spinners heating switch	B-45	1
34.	Neutral gas bottles heating switch	B-45	1
35.	Tail unit (stabilizer and fin nose parts) heating switch	B-45	1
36.	Pitot tubes heating switch	2ПВН -45	1
		ЗПВН -45	2
37.	Clock heating switch	B-45	1
38.	Emergency pressure dump switch	B-45	1

Navigator's instrument panel

The navigator's instrument panel is installed on three standard shock absorbers, between Fr. Nos. 2 and 3 (port) above the navigator's plotting table.

To facilitate servicing, the panel may be swung down and fixed with restricting straps.

Instruments located on the navigator's instrument panel

No.	Description	Type or mark	Units per assy
1.	Clock	АЧХО	1
2.	АРК-5 ADF dual-pointer indicator	УШБ-2	1
3.	Altimeter	ВД-10	1
4.	Air speed indicator	КУС-1500	1
5.	ГИК-1 compass synchronizing button	-5КС	1
6.	ГИК-1 compass indicator	УГ-2	1
7.	НИ-50СЧ counter	НИ-50-СЧ	1

Declassified in Part - Sanitized Copy Approved for Release 2011/12/14 : CIA-RDP80T00246A064200070001-1

Declassified in Part - Sanitized Copy Approved for Release 2011/12/14 : CIA-RDP80T00246A064200070001-1

1	2	3	4
8.	НИ-50БМ wind unit	[illegible]	1
9.	Ambient air thermometer	ТНВ-1 (ТНВ-15 set)	1
10.	ДАК-ДБ-5 track corrector	[illegible]	1
11.	НИ-50БМ course indicator	[illegible]	1
12.	True course indicator (astro compass)	[illegible]	1

NAVIGATOR'S CONTROL PANEL

The navigator's control panel made of 2 mm duralumin sheet is mounted above the navigator's instrument panel.

To facilitate installation or removal of instruments it may be swung down with two top attachment screws removed. Hinges are provided at the lower attachment points. The panel is held in the swung-down position by restricting straps.

Instruments installed on the navigator's control panel

No.	Description	Type or mark	Units per assy
1	2	3	4
1.	ГПК-52 directional gyro control panel	ГПК-52-ПУ	1
2.	Oxygen indicator	ИК-24	1
3.	"Use oxygen" [redacted] warning signal lamp (blue)	СЦ-51	1
4.	Instrument panel U.V.L. rheostats	РУОС-48	2
5.	Pilots' АРК-5 No.2 АПР indicator connecting switch for true course indication from astro compass	В-45	1
6.	Interphone subset	СПУ-7	1
7.	Navigator's glass heating switch	В-45	1

Declassified in Part - Sanitized Copy Approved for Release 2011/12/14 : CIA-RDP80T00246A064200070001-1

Declassified in Part - Sanitized Copy Approved for Release 2011/12/14 : CIA-RDP80T00246A064200070001-1

1	2	3	4
8. Fan switch		B-45	1
9. Plafond switch		B-45	1
10. ARK-5 No.2 ADF control box			1
11. ARK-5 No.1 ADF control box			1
[redacted]		[redacted]	[redacted]
12. Radio set switch-on button		K4M	1
13. ARK-5 No.1 ADF "Folded dipole -beam" [redacted] antenna selector switch		B-45	1

Pilots' Consoles

The pilot's and the co-pilot's control consoles (Fig.4 and 5) are of box-type construction. Their upper panels are made of 2 mm. duralumin sheet and the side panels of 2 mm magnesium alloy sheet.

The side panels have access doors for maintenance operations, three on the left and four on the right console. The back panels contain electrical plug connectors and the front panels-fittings for connecting hydraulic [illegible].

The consoles are installed on the pilots' bridges at the aircraft side walls between [illegible] and 7 and are fastened to the floor and side walls with screws.

The pilot's consoles contain engine controls, flap controls, elevator trim controls, L.G. extension - retraction controls, escape hatch controls, windscreen wipers knobs, etc.

Besides that, the pilot's console contains engine starting panel and control surfaces [illegible] lever.

[illegible] on the co-pilot's console are the L.G. emergency controls, [illegible] valve with pressure gauge, engine air bleed controls, [illegible] pressurization controls and wing heating controls.

Declassified in Part - Sanitized Copy Approved for Release 2011/12/14 : CIA-RDP80T00246A064200070001-1

Declassified in Part - Sanitized Copy Approved for Release 2011/12/14 : CIA-RDP80T00246A064200070001-1

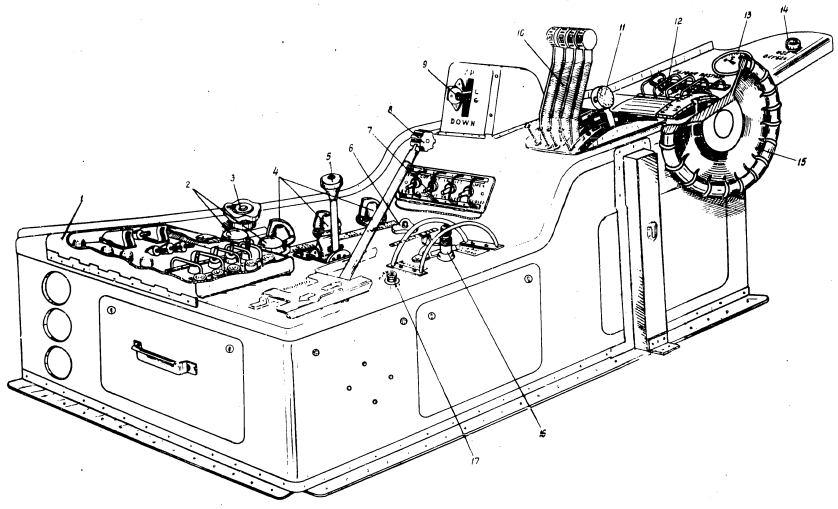

Fig. 4 Portside console

1- Engines starting panel; 2- PKO-45 formation lights dimmer switches; 3-oxygen valve; 4- instrument panels U.V.I. rheostats; 5- crew emergency escape door control lever; 6- windscreen wiper control valve; 7- engines cut-out switches; 8- control surfaces locks control lever; 9- L.G. control lever; 10-engine power control levers; 11- engine power control levers lock; 12- flight re-start switches; 13- oxygen indicator; 14- oxygen use warning light; 15- elevator trim tab control hand wheel; 16- flap control switch; 17- warning horn cut-out button.

Declassified in Part - Sanitized Copy Approved for Release 2011/12/14 : CIA-RDP80T00246A064200070001-1

Declassified in Part - Sanitized Copy Approved for Release 2011/12/14 : CIA-RDP80T00246A064200070001-1

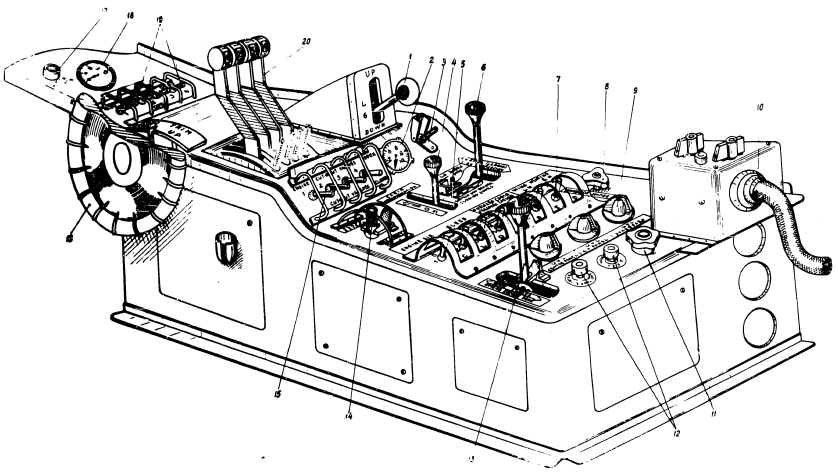

Fig. 5. Starboard Console

1- L.G. control lever; 2- door sealing pressure gauge; 3- L.G. doors automatic control cut-out switch; 4- forward cabin door sealing lever; 5- L.G. doors emergency opening control switch; 6- L.G. emergency extension and L.G. doors closing control lever; 7- switches for engine air bleed to pressurize forward cabin and heat wing L.E.; 8- windscreen wiper control valve; 9- instrument panels РУФО -48 U.V.L. rheostats; 10- РСБ -70 radio control panel ; 11- oxygen valve; 12- warning horn button; 13- emergency escape door control lever; 14- flap control switch; 15- engine cut-out switches; 16- elevator trim tab control hand wheel; 17- oxygen use warning light; 18- oxygen indicator; 19-engine compressor guide vanes heat control switches; 20- engine power control levers.

Declassified in Part - Sanitized Copy Approved for Release 2011/12/14 : CIA-RDP80T00246A064200070001-1

Declassified in Part - Sanitized Copy Approved for Release 2011/12/14 : CIA-RDP80T00246A064200070001-1

The console- mounted switches are covered with rubber protector caps.

In front of the pilots' consoles there are auxiliary panels on which the oxygen indicators and "Use oxygen" [redacted] warning lights are installed.

Besides that, the pilot's auxiliary panel contains engine air starting switches, and the copilot's auxiliary panel - engine inlet guide vanes heating switches.

Attendant's Instrument Panel

The attendant's instrument panel is mounted on Fr. No. 0 (port) on three standard 271c49-1-5 shock absorbers attached to special brackets. The panel is bonded by means of a flexible strip.

The instrument panel containts:

ВД-10 altimeter;

КУС-1200 air speed indicator;

АВРМ clock;

ТВ-45 cabin temperature indicator.

Gunner's Instrument Panel

The gunner's instrument panel is mounted in the upper part of the aft cabin, free for observation.

The panel is mounted on three standard 271c49-1-5 shock absorbers supported by special brackets.

The panel is bonded by means of a flexible strip.

2. Flight and Navigation Instruments

General Description

All aircraft instruments may be generally classified accordin.

Declassified in Part - Sanitized Copy Approved for Release 2011/12/14 : CIA-RDP80T00246A064200070001-1

Declassified in Part - Sanitized Copy Approved for Release 2011/12/14 : CIA-RDP80T00246A064200070001-1

to their designation as: flight and navigation instruments, engine control instruments and systems, and auxiliary instruments (air conditioning and pressurization, hydraulic system etc.).

The flight and navigation equipment installed in the aircraft is provided to ensure safe day and night aircraft flying and navigation in all-weather conditions, at any altitude up to the aircraft service ceiling, and in high latitudes of Northern hemisphere.

This group of instruments contains:

1. Barometric instruments
   - КУС-1200 air speed indicator 5 ea.
   - ВД-10 altimeter 5 ea.
   - ВАР-30-3 rate-of-climb indicator - 2 ea.
   - МС-1 machmeter - 1 ea.
2. ЗУП-53 turn-and-slip indicator - 2 ea.
3. АГБ-2 altitude indicator - 3 ea.
4. АП-28Д electric hydraulic autopilot - 1 set
5. ГИК-1 induction compass - 1 set
6. ГПК-52 directional gyro - 1 set
7. НИ-50БМ navigational indicator - 1 set
8. СП-1 sextant - 1 set
9. ПАК-ДБ-5 astro compass - 1 set
10. ТНВ-15 outside air thermometers - 3 sets
11. КИ-13 compass - 2 ea
12. АМ-10 accelerometer - 1 ea
13. ТВ-45 cabin air thermometer - 2 ea
14. АВРМ clock - 2 ea
15. АЧХ0 clock - 2 ea

Declassified in Part - Sanitized Copy Approved for Release 2011/12/14 : CIA-RDP80T00246A064200070001-1

Declassified in Part - Sanitized Copy Approved for Release 2011/12/14 : CIA-RDP80T00246A064200070001-1

location of navigational equipment is shown in Fig. 6.

КУС-1200 Combined Airspeed Indicator

The aircraft is equipped with five КУС-1200 combined airspeed indicators located on the pilots' panels, navigator's panel, gunner's panel, and in the cargo panel.

The instrument is designed to measure the aircraft speed relative to air and presents information on indicated air speed and true airspeed. The wide pointer indicates the indicated air speed from 150 to 1200 km/hr at altitudes up to 15000 m and the narrow pointer - the true airspeed within 400-1200 km/hr. beginning from flight altitude 4000 m.

The instrument is provided with a single scale for indicating air speed within the 150-1200 km/hr range. The scale division value is 10 km/hr.

ВД-10 Dual Pointer Altimeter

The aircraft is equipped with five ВД-20 altimeters located on the pilots', navigator's and gunner's panels, and in the cargo cabin.

The ВД-10 dual-pointer altimeter is designed to determine aircraft altitude relative to points of take-off and landing, or some other ground point the barometric pressure for which is known.

The instrument has two pointers, one long and the other short. The long pointer indicates altitude in meters and makes one turn per every 1000 m altitude change, while the short pointer indicates altitude in kilometers.

The altimeter is fitted with a knob for barometric pressure setting.

Declassified in Part - Sanitized Copy Approved for Release 2011/12/14 : CIA-RDP80T00246A064200070001-1

Declassified in Part - Sanitized Copy Approved for Release 2011/12/14 : CIA-RDP80T00246A064200070001-1

3

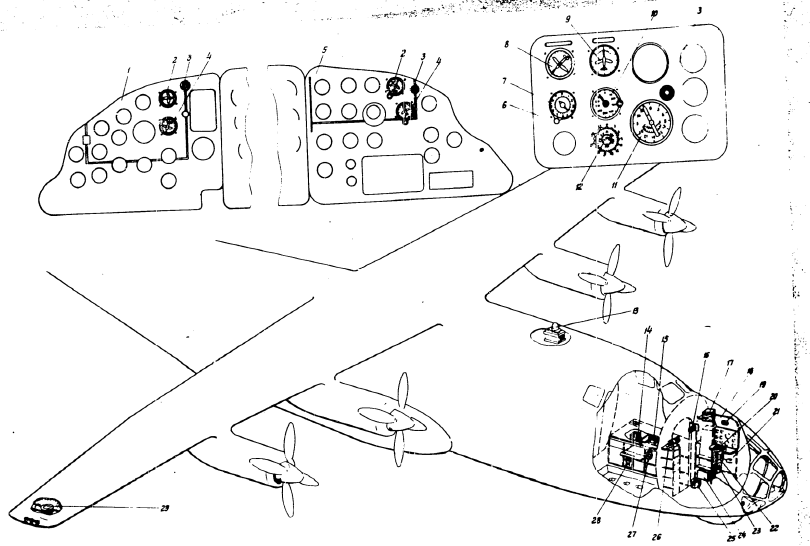

Fig. 6 Location of navigat[illegible]

1-pilot's instrument panel; 2- ПИК-1 compass indicator; [illegible]ПК-1 synchronizing button; 4- ПШК-52 direction gyro indicator; 5-copilot's instrument panel; 6-navigator's instrument panel; 7-ДАК-ДБ-5 remote-control astro-compass track corrector; 8-astro-compass true course indicator; 9-НИ-50БМ automatic course indicator; 10-НИ-50БМ counter; 11-navigator's ПИК-1 compass indicator; 12-НИ-50БМ wind unit; 13-course angles transmitter of the ДАК-ДБ-5 unit; 14-ПИК-1 compass amplifier; 15-correction cut-out switch; 16-ПИК-1 compass corrector; 17- ДАК-ДБ-5 unit computer; 18-navigator's control panel; 19-ПШК-52 directional gyro control panel; 20-НИ-50БМ control panel; 21-П-1 temperature sensors (НИ-50БМ set); 22-НИ-50БМ distribution box; 23-ПШК-52 junction box; 24- ДАК-ДБ-5 unit amplifier; 25-directional gyro; 26- НИ-50БМ unit transmitter; 27-ПИК-1 gyro unit; 28- ПИК-1 junction box; 29-ПИК-1 induction sensor.

Declassified in Part - Sanitized Copy Approved for Release 2011/12/14 : CIA-RDP80T00246A064200070001-1

Declassified in Part - Sanitized Copy Approved for Release 2011/12/14 : CIA-RDP80T00246A064200070001-1

3

Permissible Instrument Errors for Various Temperatures are Presented in the Table below:

Instrument errors in meters at temperature of 20°C

Altitude, m.	
0	±15
500	±20
2000	±35
4000	±45
6000	±60
8000	±90
10000	±90

BAP-30-3 Rate-of-Climb Indicator

BAP-30-3 rate-of-climb indicators located on the pilot's instrument panels are designed to measure the aircraft vertical speed (during climb or descent). The instrument has a knob in its left lower part, for setting the pointer in the zero position.

Permissible Instrument Errors

Scale Point	Error in m/sec.	Scale point	Error in m/sec.
1	± 0.75	16	± 3
4	± 2	20	± 3
8	± 2	24	± 3
12	± 2.5	30	± 3

Declassified in Part - Sanitized Copy Approved for Release 2011/12/14 : CIA-RDP80T00246A064200070001-1

Declassified in Part - Sanitized Copy Approved for Release 2011/12/14 : CIA-RDP80T00246A064200070001-1

3.

ЭУП-53 Electrical Turn-and-Slip Indicators [redacted]

The ЭУП-53 electrical turn-and-slip indicator is designed for indication of correctness of aircraft turns about the vertical axis with angles of roll up to 45°. The turn-and-slip indicator is a combined instrument incorporating a turn indicator and a side-slip indicator.

The aircraft is equipped with two ЭУП-53 indicators installed on the pilot's and co-pilot's instrument panels.

The ЭУП-53 indicators are fed from the aircraft 27 V D.C. power distribution system. The instruments are controlled by means of corresponding switches on the pilot's and co-pilot's panels.

АГБ-2 Electrical Attitude Indicator

The АГБ-2 electrical attitude indicator serves to indicate the aircraft attitude relative to the true horizon in straight flight and maneuvers, and the presence and direction of side-slip.

The АГБ-2 attitude indicator is actually a combination of two instruments in one casing - an attitude indicator and a side-slip indicator.

To eliminate adverse effects of the correction device on the gyro during a turn at angular velocity exceeding 0.3 degree per sec., the АГБ-2 lateral correction stabilizing the gyro in the lateral direction is cut off by the ВК-53РБ correction cut-off switch.

The caging knob on the right side of the instrument serves to shorten the gyro erection time during the set-up procedure and should be turned counterclockwise, so that the red warning index is exposed on the instrument dial.

Declassified in Part - Sanitized Copy Approved for Release 2011/12/14 : CIA-RDP80T00246A064200070001-1

Declassified in Part - Sanitized Copy Approved for Release 2011/12/14 : CIA-RDP80T00246A064200070001-1

The gyro having been erected, the caging knob should be turned to the extreme clockwise position. In this position the warning index is not visible.

Three АГБ-2 attitude indicators are installed in the aircraft, two of them being located on the pilot's instrument panel (left being main and right - stand-by) and one - on the co-pilot's panel.

The instruments are supplied with 36 V, 400c.p.s. 3-phase A.C. power.

The instruments are switched-on with ЗВ-20 switches on the pilot's and co-pilot's panels.

Main Operating Data of the АГБ-2 Attitude Indicator

1. Instrumental error at roll and pitch angles measuring in straight flight - not more than 1°;

2. Instrumental error of the aircraft attitude indication during turns with angles of roll within 8 to 80° for a period of up to 6 min. - $1 - 2^{\circ}$;

3. Instrumental error during turns for a period of not more than 15 minutes does not exceed $\pm 5^{\circ}$.

МС-1 Machmeter

The МС-1 machmeter installed on the pilot's instrument panel is designed to measure the Mach number (that is, the ratio of the aircraft true airspeed to the speed of sound) during flight at various altitudes. The pilot observes the Mach number as presented

Declassified in Part - Sanitized Copy Approved for Release 2011/12/14 : CIA-RDP80T00246A064200070001-1

Declassified in Part - Sanitized Copy Approved for Release 2011/12/14 : CIA-RDP80T00246A064200070001-1

on the instrument dial.

Besides, the МС-1 instrument controls (through a special contact system) a speed limit warning light signal, relative to Mach number.

ГПК-52 Directional Gyro

The ГПК-52 directional gyro is designed to maintain the aircraft on the preselected heading for long periods of time and to perform turns for required angles. It consists of a transmitter, control panel, two indicators and a junction box. The main unit of the instrument is the ГПК-52 transmitter which is installed on a bracket on Fr.No.4 (port) at the navigator's station (Fig.6). It serves as the navigator's indicator and master unit for the ПДК-49 repeaters located on the pilot's and co-pilot's panels, accordingly. The instrument is controlled from the navigator's ГПК-52-ПУ control panel installed above his instrument panel (Fig.6).

To facilitate observation of the ГПК-52 transmitter dial readings when illuminance is insufficient the transmitter dial is illuminated with a КЛСРК spot light provided with a continuous brightness control and mounted above the transmitter.

The ГПК-52 set electrical circuits are connected through a junction box installed vertically on the navigator's rack (port), between Fr. Nos. 3 and 4.

The set is supplied with 27 V ± 10% D.C. power and 36 V, 400 c.p.s. three-phase A.C. power from the aircraft distribution system.

D.C. power is supplied to the ГПК-52 transmitter potentionmeter while A.C. power is supplied to the gyro rotor motors, compass correction motors, and the ДИД-0,5 motor which turns the ГПК-52 transmitter dial and the potentiometer brushes. The ГПК-52 A.C. circuits are protected by three СП-2 fuses installed in the РК-36 V

Declassified in Part - Sanitized Copy Approved for Release 2011/12/14 : CIA-RDP80T00246A064200070001-1

Declassified in Part - Sanitized Copy Approved for Release 2011/12/14 : CIA-RDP80T00246A064200070001-1

distribution box, and the D.C. circuits are protected by the АЗС-2 C.B. located on the navigator's C.B. panel.

ГИК-I Remote-Control Induction Compass

The ГИК-I induction compass is designed for indicating magnetic (true) heading and feeding course data into the АП-28Д autopilot and the НИ-50-БМ air position indicator. Installation of the ГИК-I compass units is shown in Fig. 7.

The units comprising the ГИК-I set are installed as follows:

- ИД induction transmitter - in the right wing, between the front and aft spars at rib No.24;
- two УК-4 pilots' indicators - on the pilot's and co-pilot's panels, one for each panel;
- Г-3 gyro unit, У-6М amplifier and СК-19 junction box - under the pilot's bridge;
- КУ compass corrector - on frame No.4 in the navigator's cabin;
- УН-2 navigator's indicator - on the navigator's instrument panel;
- three synchronizing buttons near the indicators.

The ГИК-I set is supplied from the aircraft distribution system with 36 v, 400 c.p.s. 3-phase A.C. power, and 27 v D.C. power.

The ПК-53ПБ correction switch installed under the pilot's bridge (Fig.6) is engaged simultaneously with the ГИК-I set. It provides cutting-off horizontal correction of the Г-3 gyro units (ГИК-I set) and the ИГВ master vertical gyro (autopilot set).

The ГИК-I Compass Main Operating Data

1. Compass erection time, depending on the ambient air temperature, does not exceed 1-3 minutes.

Declassified in Part - Sanitized Copy Approved for Release 2011/12/14 : CIA-RDP80T00246A064200070001-1

Declassified in Part - Sanitized Copy Approved for Release 2011/12/14 : CIA-RDP80T00246A064200070001-1

3.

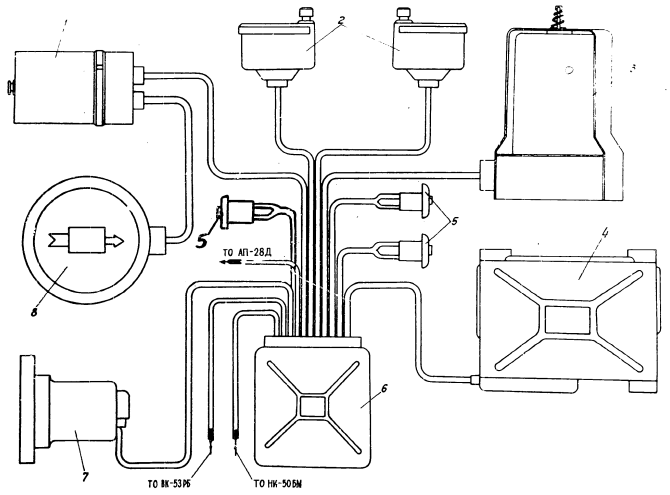

Fig. 7 ГИК-1 induction compass units.

1- compass adjuster; 2-pilots' indicator; 3-gyro unit; 4- amplifier; 5- ГИК-1 synchronizing buttons; 6-junction box; 7-navigator's indicator; 8- induction transmitter.

Declassified in Part - Sanitized Copy Approved for Release 2011/12/14 : CIA-RDP80T00246A064200070001-1

Declassified in Part - Sanitized Copy Approved for Release 2011/12/14 : CIA-RDP80T00246A064200070001-1

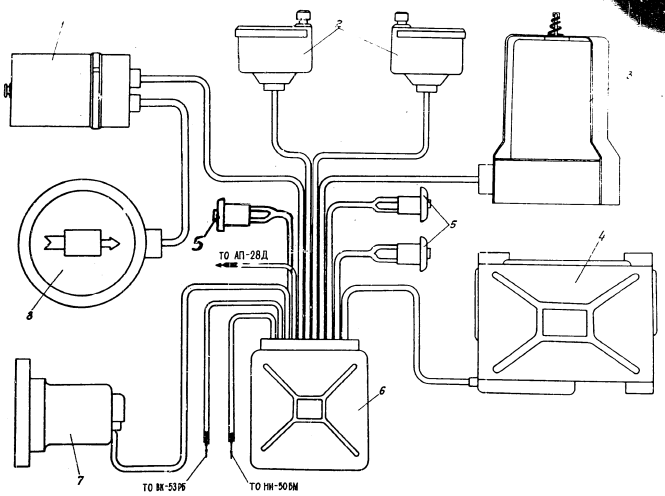

Fig. 7 ГИК-1 induction compass units.

1- compass adjuster; 2-pilots' indicator; 3-gyro unit; 4- amplifier; 5- ГИК-1 synchronizing buttons; 6-junction box; 7-navigator's indicator; 8- induction transmitter.

Declassified in Part - Sanitized Copy Approved for Release 2011/12/14 : CIA-RDP80T00246A064200070001-1

Declassified in Part - Sanitized Copy Approved for Release 2011/12/14 : CIA-RDP80T00246A064200070001-1

2. The compass instrument errors in determining the magnetic heading do not exceed $\pm 1.5^{\circ}$.

3. Instrumantal error after performing a turn, does not exceed 0.5°.

4. УШ-2 errors do not exceed $\pm 1^{\circ}$.

НИ-50 БМ Air Position Indicator

The НИ-50 БМ air position indicator installed in the aircraft is designed to determine the aircraft position in present rectangular co-ordinates.

The НИ-50 БМ set includes (Fig. 8):

- ДВС airspeed transmitter;
- two П-1 outside air temperature transmitters;
- АК automatic course indicator;
- СЧ counter;
- ВВ wind unit;
- РТ distribution box;
- stencil.

The ДВС airspeed transmitter is installed on the right-hand rack between Fr. Nos.3 and 4 (Fig.6). The back plate of the instrument contains a plug connector and two fittings for connecting the instrument to the Pitot system.

On the face of the НИ-50 БМ instrument there is a rotatable scale of the true airspeed indicator.

Two П-1 outside air temperature transmitters are installed in special adapters riveted to the aircraft skin on the port side near Fr. No.1, between stringers 30, 31 and 32. The temperature transmitters are screwed into the adapters from the navigator's cabin.

Declassified in Part - Sanitized Copy Approved for Release 2011/12/14 : CIA-RDP80T00246A064200070001-1

Declassified in Part - Sanitized Copy Approved for Release 2011/12/14 : CIA-RDP80T00246A064200070001-1

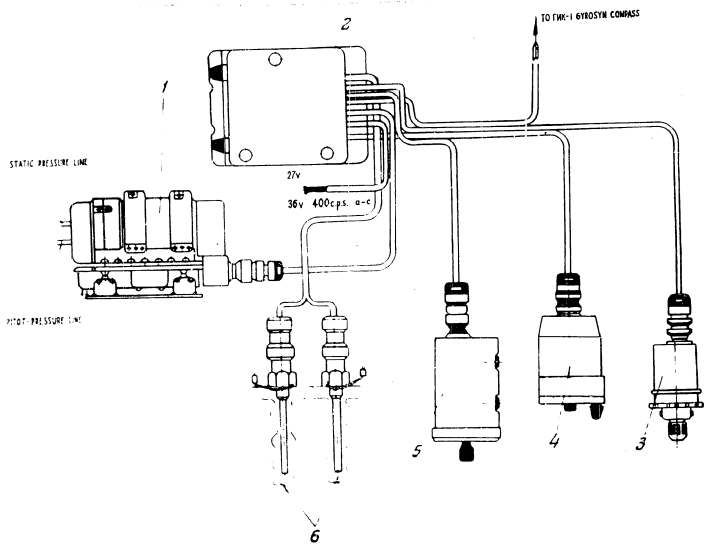

Fig. 8 НИ-50БМ navigational indicator units.

1-true air speed transmitter; 2-junction box; 3-wind unit; 4-АК automatic course indicator; 5-СЧ counter; 6-П-1 ambient temperature transmitter.

Declassified in Part - Sanitized Copy Approved for Release 2011/12/14 : CIA-RDP80T00246A064200070001-1

Declassified in Part - Sanitized Copy Approved for Release 2011/12/14 : CIA-RDP80T00246A064200070001-1

The AK automatic course indicator, Сч counter and ДВ wind unit are located on the navigator's instrument panel. The automatic course indicator has a cam strip assembly to compensate for errors due to the presence of remote transmission from the УШ-2 (ГИК-1set) and AK (НИ-50БМset).

The PK distribution box is fixed to vertical sections adjacent to frame No.3 (port) under the navigator's plotting table (Fig.6).

Each НИ-50БМ set is supplied with a stencil for preparing flight charts (plotting the rectangular coordinates grid). The stencil is placed in the drawer of the navigator's plotting table.

The Сч counter indicates on its scales distance flown along the two axes of the rectangular coordinates grid plotted on the flight chart. The counter scale range allows to measure distance along the coordinate presented by the "C" pointer up to 5000 km. and along the coordinate presented by the "B" pointer up to 1000 km. Scale division value is 10 km.

The instrument is fed from the aircraft distribution system with 27 v D.C. power and 36 v, 400 c.p.s. three-phase A.C. power[redacted]

СП-1 Periscopic Sextant

The СП-1 sextant is designed for measuring the angular altitudes of celestial bodies. The instrument allows to determine the aircraft position utilizing astronomical lines of position and serves in night flights when used in set with ДАК-ДБ-5 astro compass for determining occasionally the true aircraft course.

To prevent damage of the СП-1 optical system while the aircraft is parked, parts protruding beyond the fuselage skin are covered with an easily removable protective metal cap.

Declassified in Part - Sanitized Copy Approved for Release 2011/12/14 : CIA-RDP80T00246A064200070001-1

Declassified in Part - Sanitized Copy Approved for Release 2011/12/14 : CIA-RDP80T00246A064200070001-1

The СП -1 sextant may be purged with pressure air (Fig. 9). Hot air is bled from the cabin pressurization manifold between frames Nos.21 and 22, under the cargo cabin floor (port), and is delivered to pressure reducer 436 installed between frames Nos.12 and 13 under the floor (starboard). The 436 reducer is adjusted for outlet pressure of 0.6 -0.7 kg/cm^2 at inlet pressure of 1.5 kg /cm^2. Low pressure hot air is delivered to a shut-off valve mounted on frame No.8 between stringers 40 and 44, starboard. The shut-off valve has a fitting with a plug for connecting a compressed air bottle for sextant post-flight drying. From the shut-off valve the hot air is fed to a special dehydrator containing silica-gel, mounted on Fr. No.8, between stringers 45 and 47. At the outlet of the dehydrator there is a glass-covered inspection hole for checking the silica-gel condition. The СП-1 sextant purging system should be switched on at altitudes above 2000 m.

To facilitate operation with the СП-1 sextant a working platform is provided which may be adjusted for three positions according to the navigator's height. When not used the platform is folded down and stowed behind the pilot's bridge on the floor (Fig. 9).

The СП-1 periscopic sextant is supplied with 27 v D.C. power through the АЗС-2 C.B. on the navigator's C.B. panel. The receptacle for the СП -1 power cord cable is installed on frame No.7. The СП -1 sextant is connected to the astrochronometer indicator with a special 204n cable,

The chronometer is supplied with 27 v D.C. power from the aircraft distribution system through the АЗР-6 C.B. on the navigator's C.B. panel. Power is fed through an Ф -14А filter to the 48К receptacle mounted on frame No.9, near the astrochronometer transmitter. The receptacle is used for connecting the power cable of the chronometer transmitter.

Declassified in Part - Sanitized Copy Approved for Release 2011/12/14 : CIA-RDP80T00246A064200070001-1

Declassified in Part - Sanitized Copy Approved for Release 2011/12/14 : CIA-RDP80T00246A064200070001-1

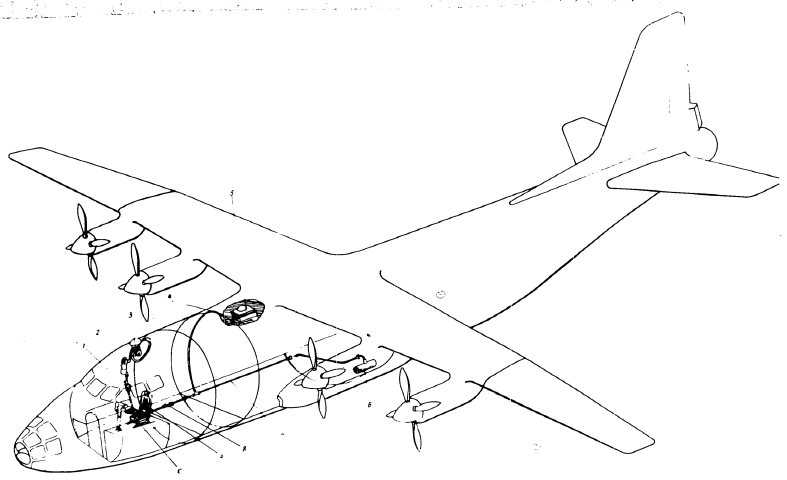

Fig. 9 ДАК-ДБ-5 astro-compass and СП-1 sextant heating diagram.

1-shut-off valve; 2-dehydrator; 3-СП-1 sextant; 4-filter; 5-course angles transmitter of the ДАК-ДБ-5 astro-compass; 6-cabin air pressure supply pipe; 7-air line; 8-436 reducer; 9-foot-rest in stowed position (on the pilot's seat); 10-working step platform for СП-1 sextant.

Declassified in Part - Sanitized Copy Approved for Release 2011/12/14 : CIA-RDP80T00246A064200070001-1

Declassified in Part - Sanitized Copy Approved for Release 2011/12/14 : CIA-RDP80T00246A064200070001-1

The transmitter is connected to the chronometer indicator with a cable. In case the astrochronometer is not installed in the aircraft the conductors [illegible] of this cable are insulated. The astrochronometer is automatically controlled by means of a contact system connected with the СП-1 sextant averaging [illegible] celestial body No. selector switch.

ДАК-ДБ-5 Remote-control Astrocompass

The ДАК-ДБ-5 remote-control astrocompass is designed to automatically determine the aircraft true heading relative to the sun, and when operating in set with the periscopic sextant – to determine occasionally the aircraft true heading relative to planets, the moon and stars. Besides, the ДАК-ДБ-5 allows to fly the aircraft along the great-circle path for distances up to 1100 km. provided the sun is visible. The ДАК-ДБ-5 instrument facilates the navigator's determining with the help of the СП-1 sextant the bearing of the required celestial body on the celestial sphere at a given moment.

The ДАК-ДБ-5 set includes:

- sun course angles transmitter,
- computer;
- amplifier;
- ПДК-49 indicator;
- track corrector.

The ДКУ sun course [illegible] transmitter is installed on the fuselage upper surface, 120 [illegible] of the aircraft center-line, near frame No. 47.

The ДКУ unit is installed in a special slot in the fuselage skin, provided with a [illegible] fairing.

Declassified in Part - Sanitized Copy Approved for Release 2011/12/14 : CIA-RDP80T00246A064200070001-1

Declassified in Part - Sanitized Copy Approved for Release 2011/12/14 : CIA-RDP80T00246A064200070001-1

The unit casing is attached to this frame with eight bolts so that the coloured marks on the frame and the unit casing are aligned. These marks serve to ensure correct installation of the unit with respect to the aircraft longitudinal axis. When the aircraft is parked, the unit part projecting beyond the fuselage skin are covered with an easily removable protective metal cap. The unit is connected with the amplifier by means of a cable. The photographic device and mechanism may be purged with hot air. For this purpose a tee is installed in the СП-1 purging line between frames Nos.13 and 14 to feed hot air through 16x14 piping to the [redacted] filter.

The computer is installed on top of the instrument rack, between frames Nos.3 and 4 (Fig.6).

The amplifier is installed on the floor in the navigator's cabin between frames Nos. 3 and 4 (port)(Fig.6).

The ПДК 49 compass indicator and the track corrector are installed on the navigator's instrument panel. There is no aircraft true heading indicator for the pilots. Instead, the pilots use the СУП-7 compass selsyn indicator (in the ПК-9 ABF No.2 set) on the pilot's instrument panel.

The ДАК-ДБ-5 astro compass is supplied with 27 v d.c. power from the aircraft distribution system through the [redacted]-15 C.B. on the navigator's C.B. panel and with 115 v 400 c.p.s. a.c. power [redacted] through the СП -2 fuse installed in the РК 115 v distribution box on frame No.9. Power is supplied to the amplifier in the ДАК-ДБ-5 set, which also serves as a distribution box.

Declassified in Part - Sanitized Copy Approved for Release 2011/12/14 : CIA-RDP80T00246A064200070001-1

Declassified in Part - Sanitized Copy Approved for Release 2011/12/14 : CIA-RDP80T00246A064200070001-1

THB-15 Outside Air Thermometers

To measure outside air temperature the aircraft is equipped with three THB-15 sets, each comprising a transmitter and an indicator.

Two transmitters are attached to the fuselage skin at frame No.7 (starboard) and the third one at frame No.62.

The THB-15 sets are supplied with 27 V D.C. from the aircraft distribution system through the A3C-2 C.B. installed on the navigator's C.B. panel, on the C.B. panel on Fr. No.9 and on the gunner's electrical panel, one for each panel. [redacted]

AП-28П Automatic Pilot

The AП-28П electric-hydraulic autopilot installed in the aircraft is designed for flight control of the aircraft. The autopilot provides for automatic stabilization of the aircraft in straight level flight, performance of coordinated turns with angles of roll up to 30°, climbing and descent with pitch angles up to 30°.

Engaging the autopilot does not require preliminary adjustment and may be done at any heading and any pitch and roll angles within ±30° relative to the true horizon.

When the autopilot is engaged in straight flight by means of a push-button on the control handle, it maintains the initial heading, pitch and roll of the aircraft.

With the autopilot engaged, control of the aircraft by means of the control column and pedals is transferred to the autopilot controlling the aircraft by means of servo units.

If the autopilot is engaged while the aircraft is performing a turn the aircraft will continue to perform a coordinated turn with the same roll and pitch angles.

Declassified in Part - Sanitized Copy Approved for Release 2011/12/14 : CIA-RDP80T00246A064200070001-1

Declassified in Part - Sanitized Copy Approved for Release 2011/12/14 : CIA-RDP80T00246A064200070001-1

Provisions are made to engage the autopilot by means of a special "Return to level flight" [redacted] knob. In this case the aircraft heading will be maintained, roll will be automatically eliminated, and the aircraft longitudinal axis will be aligned according to the pitch angle specified for this aircraft.

As the autopilot servo units may be overpowered by the pilot in case of autopilot failure, the aircraft will not assume a dangerous attitude for a five seconds' time, which enables the pilot to either disengage the autopilot in time or to overpower it.

Before engaging the autopilot it is necessary to synchronize the ГИК-1 compass by the use of a synchronizing button.

To prevent failure of the ЦГВ-2 and ДУС units, taxying, take-off and landing should be performed with the АП-28Д autopilot engaged and the РА-28П servoes disengaged. For this purpose a switch in power circuits of the РА-28П servo units is provided on the central board of the pilot's instrument panel. The pilot should place the РА-28П switch in the "on" position before engaging the АП autopilot by the use of the button on the control handle.

The АП-28Д set comprises (Fig. 10 and 11 :

- the ЦГВ-2 master vertical gyro designed to provide output signals proportional to the roll and pitch angles; the ЦГВ-2 is mounted on a special bracket in the upper part of the cargo cabin, between fr. No. 21 and 22;

- the ДУС angular velocity transmitter designed to provide output signals proportional to angular velocities of the aircraft about the three main axes; the ДУС transmitter is mounted on a bracket adjacent to the ЦГВ-2 unit;

- control box containing electrical units and electromechanisms which ensure autopilot functioning under any flight conditions; the control box is installed on the instrument rack under the pilot's bridge;

Declassified in Part - Sanitized Copy Approved for Release 2011/12/14 : CIA-RDP80T00246A064200070001-1

Declassified in Part - Sanitized Copy Approved for Release 2011/12/14 : CIA-RDP80T00246A064200070001-1

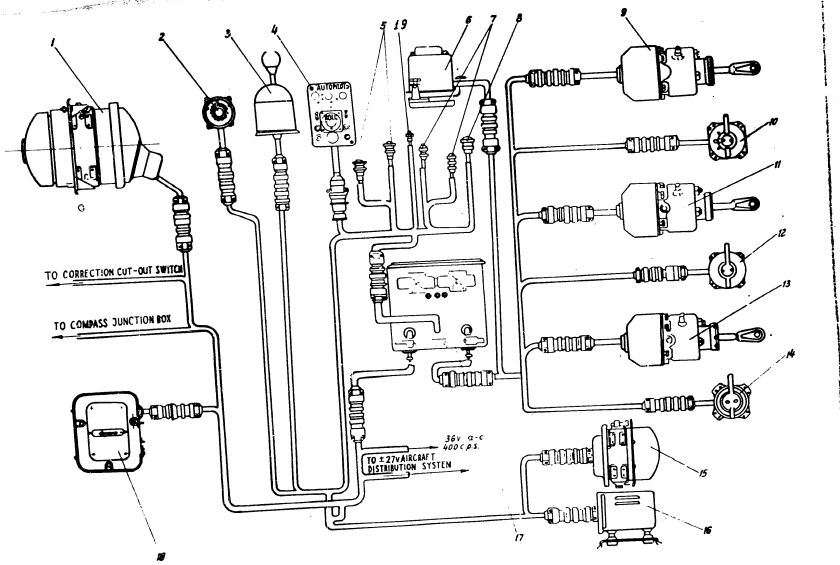

Fig. 10 АП-28Д autopilot units.

1-master vertical gyro; 2-autopilot control lever /navigator's/; 3-autopilot control lever /pilot's/; 4-control panel; 5-autopilot disengagement buttons; 6-shaker; 7-Return to level flight" buttons; 8-navigator's autopilot disengagement button; 9-roll servo; 10-roll feedback transmitter; 11- pitch servo; 12-pitch feedback transmitter; 13- yaw servo; 14-yaw feedback servo; 15- altitude corrector; 16- altitude corrector amplifier; 17-control box; 18-angular velocity transmitter; 19-return from bank.

Declassified in Part - Sanitized Copy Approved for Release 2011/12/14 : CIA-RDP80T00246A064200070001-1

Declassified in Part - Sanitized Copy Approved for Release 2011/12/14 : CIA-RDP80T00246A064200070001-1

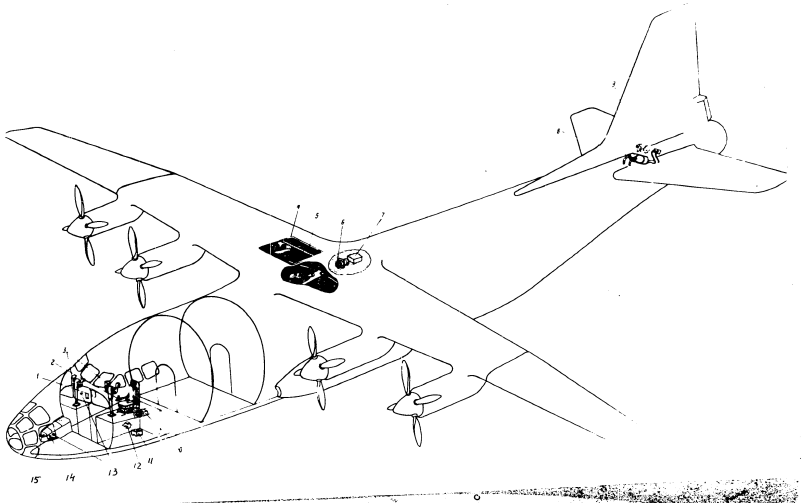

Fig. 17. АП-28Д autopilot location diagram.

1-control panel; 2-autopilot control lever (pilot's); 3-autopilot disengagement knob; 4-feedback transmitter; 5-servo unit; 6-master vertical gyro; 7-angular velocity transmitter; 8-servo unit; 9-feedback transmitter; 10-altitude corrector; 11-control unit; 12-shaker; 13-"Return to level flight" switch; 14-autopilot engagement switch (navigator's); 15-autopilot control lever (navigator's).

Declassified in Part - Sanitized Copy Approved for Release 2011/12/14 : CIA-RDP80T00246A064200070001-1

Declassified in Part - Sanitized Copy Approved for Release 2011/12/14 : CIA-RDP80T00246A064200070001-1

- PA-5ВП servo unit designed to actuate the aircraft control surfaces; the PA-5ВП servo may be over-powered by the pilot through the use of the aircraft controls;

- autopilot control handle mounted on the pilot's seat elbow-rest; in flight the control may be transferred from one pilot to the other;

- navigator's control handle designed for the aircraft control in coordinated turns; the handle is mounted on a special bracket on the forward part of the navigator's R.H. console;

- feedback transmitters designed to provide output signals proportional to the aircraft control surfaces deflection angles; the transmitters are connected to the control system by means of linkage; the aileron feedback transmitter is installed in the wing center section on a special bracket mounted on the rods attachment bracket; the rudder feedback transmitter and elevator feedback transmitter are installed on special brackets at fr. No.62 which are mounted on the rudder, elevator and servo unit bellcrank brackets;

- control panel designed for: switching on the autopilot power supply; providing "Autopilot "Ready for engagement" signal; transferring the autopilot controls from the pilot to the navigator; indicating the transfer of controls; indicating the position of the master vertical gyro and for switching on the master vertical gyro caging device in case of the gyro tumbling, and for the altitude corrector engagement; the control panel is installed on the pilots' center instrument panel;

- "Autopilot engagement" [redacted] switch designed for engaging the autopilot installed on the vertical wall of the navigator's R.H. console;

- "Autopilot disengagement" [redacted] switches designed for disengaging the autopilot, installed on the pilots' control wheels;

Declassified in Part - Sanitized Copy Approved for Release 2011/12/14 : CIA-RDP80T00246A064200070001-1

Declassified in Part - Sanitized Copy Approved for Release 2011/12/14 : CIA-RDP80T00246A064200070001-1

- 5K "Return to level flight" [redacted] switch designed to transfer the autopilot to aircraft automatic levelling mode of operation; one switch is installed on the centre instrument panel (for the pilot) and the other - on the navigator's/R.H. control console;

- altitude corrector designed to provide output signals proportional to changes of altitude, installed on the rack under the pilot's bridge; static pressure is fed to the corrector from the left static port;

- shaker designed to eliminate natural oscillations in the system caused by insufficient sensitivity of the autopilot; the shaker is installed under the pilot's bridge.

"Recovery from bank" button located on the pilot's instrument panel.

AM-10 Accelerometer

The AM-10 accelerometer installed on the pilot's instrument panel serves to indicate the value of load factor in the vertical plane; the AM-10 accelerometer measurement range - 5 to + 10 g; scale division value 0.5 g.

KИ-13 Magnetic Compass

The KИ-13 liquid magnetic compass is used to indicate the aircraft magnetic heading in straight level flight. The compass circular card is evenly divided and marked every 20°, the card division value being 5°.

The KИ-13 compass is an auxiliary instrument used in case of failure of the more accurate gyro-magnetic compasses.

Two KИ-13 compasses are installed in the aircraft, one - in the forward part of the navigator's cabin (Fig.2) and the other - on the

Declassified in Part - Sanitized Copy Approved for Release 2011/12/14 : CIA-RDP80T00246A064200070001-1

Declassified in Part - Sanitized Copy Approved for Release 2011/12/14 : CIA-RDP80T00246A064200070001-1

windshield framework in the pilot's cabin (fig.1), shock-mounted on special brackets.

TB-45 Thermometer

The TB-45 thermometer is used to measure the cabin air temperature.

3. Barometric Instruments Supply System

The barometric instruments installed in the aircraft (НИ-50-БМ) true airsped transmitter, КУС-1200 airspeed indicators, ВД -10 altimeters, ВАР-30-3 rate-of-climb indicators, МС-1 machmeter, УВПД-15 altitude in cabin-and-differential pressure indicators, СДУ-2А-0,18 never-exceed dynamic pressure signal devices, and altitude corrector in the АП-28Д set are operated by static and dynamic pressure. The system comprises ТП-156М Pitot tubes and [redacted] static ports. Two Pitot tubes are installed on the fuselage between Fr.Nos.8 and 9, one on the port side and the other on the starboard side. Located in the region of Pitot tubes are the static holes: two of them on the starboard side and four-on the port side.

Each tube feeds definite instruments- the port Pitot tube provides for operation of the pilot's and navigator's instruments: the starboard Pitot tube - for operation of the co-pilot's instruments, and true airspeed transmitter of the НИ -50БМ air position indicator and instruments installed at the gunner's and attendant group commander's stations.

For improving reliability of the system operation, the pilot's and navigator's instruments may be transferred to the starboard Pitot tube. The transfer of the pilot's and navigator's instruments is accomplished through two R.H. control valves.

In case of the left and the right static ports failure the pilot's and navigator's instruments may be transferred to an emergency port through a selector valve installed in the static pressure lines. The emergency static port is located under the left wing-to-fuselage fillet between Fr. Nos. 26 and 27 in the unpressurized part of the fuselage. Access to the port fitting is provided through an access door in the fillet.

Declassified in Part - Sanitized Copy Approved for Release 2011/12/14 : CIA-RDP80T00246A064200070001-1

Declassified in Part - Sanitized Copy Approved for Release 2011/12/14 : CIA-RDP80T00246A064200070001-1

To prevent moisture entering the instruments the static and Pitot lines are provided with water sumps for draining condensed water.

The sumps are installed as follows:

- Nine sumps - between Fr. Nos. 8 and 9 (port);
- Three sumps - between Fr. Nos. 7 and 8 (Starboard);
- Two cross-feed sumps under the cover, on Fr. No. 9;
- One emergency static line sump in the cargo cabin, on the Fr. No.30 wall
- Two sumps - between Fr. Nos. 43 and 44 port.

The Pitot tubes and static ports are electrically heated, the corresponding switches being located on the co-pilot's instrument panel.

For checking the Pitot static tubes heating system a signal panel is installed on the co-pilot's instrument panel.

To facilitate the system maintenance the static pressure lines are painted white, the dynamic pressure lines are painted black and have one wide blue and one narrow yellow identification rings.

To prevent [redacted] dust and dirt entering the Pitot tubes and static ports when the aircraft is parked, the ends of the Pitot tubes are covered with rubber caps and the static ports - with plugs. The plugs and caps have red warning flags to remind the crew that the tubes and ports are closed and protective coverings should be removed before flight.

Declassified in Part - Sanitized Copy Approved for Release 2011/12/14 : CIA-RDP80T00246A064200070001-1

Declassified in Part - Sanitized Copy Approved for Release 2011/12/14 : CIA-RDP80T00246A064200070001-1

S E C T I O N II

OXYGEN EQUIPMENT

4. Units of Oxygen Equipment

A low-pressure (8-10 kg/cm^2) oxygen system is installed in the aircraft to meet the requirements of the flight crew, passengers and the wounded during high altitude flight. The oxygen equipment is designed for individual and group use. It consists of:

- six individual oxygen stations for the crew;
- six group oxygen stations;
- seven КПЖ-30 oxygen converters;
- filling system and distribution system;
- five extension hoses for walk-around protection;
- oxygen system accessories for use with extension hoses;
- warning signal system of obligatory oxygen use.

Each crew oxygen station (fig.12) comprises:

- КП-24М demand type oxygen regulator;
- ИК-24 oxygen indicator;
- КП-23 bailout oxygen kit;
- КВ-5Ф shut-off valve;
- КШ-24 oxygen hose;
- КМ-30 oxygen mask;
- blue warning lamp with placard "Use oxygen".

Each group oxygen station (fig.13) includes:

- КП-32 oxygen regulator;
- МТ-50 pressure gauge for 10 atm;
- КВ-5Ф shut-off valve;
- ИК-32 oxygen indicators;
- КМ-19 oxygen masks;
- "Pressure vs Altitude" data card;

Declassified in Part - Sanitized Copy Approved for Release 2011/12/14 : CIA-RDP80T00246A064200070001-1

Declassified in Part - Sanitized Copy Approved for Release 2011/12/14 : CIA-RDP80T00246A064200070001-1

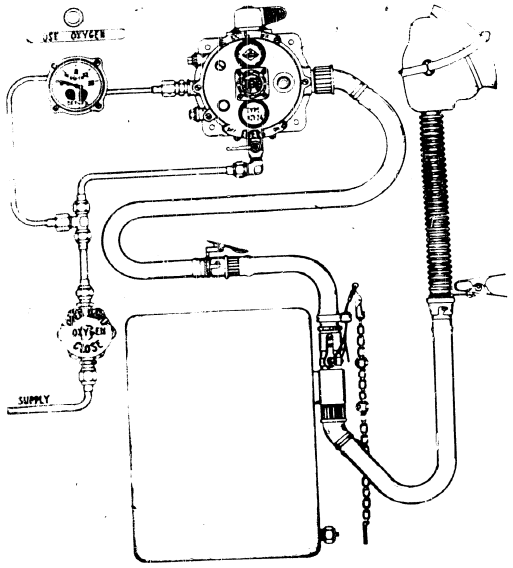

Fig. 12 Crew member oxygen station

1-КП-23 survival kit; 2-shutoff valve; 3-oxygen indicator; 4-signal lamp and placard "Use oxygen"; 5-КП-24М oxygen regulator; 6-mask; 7-oxygen hose.

Declassified in Part - Sanitized Copy Approved for Release 2011/12/14 : CIA-RDP80T00246A064200070001-1

Declassified in Part - Sanitized Copy Approved for Release 2011/12/14 : CIA-RDP80T00246A064200070001-1

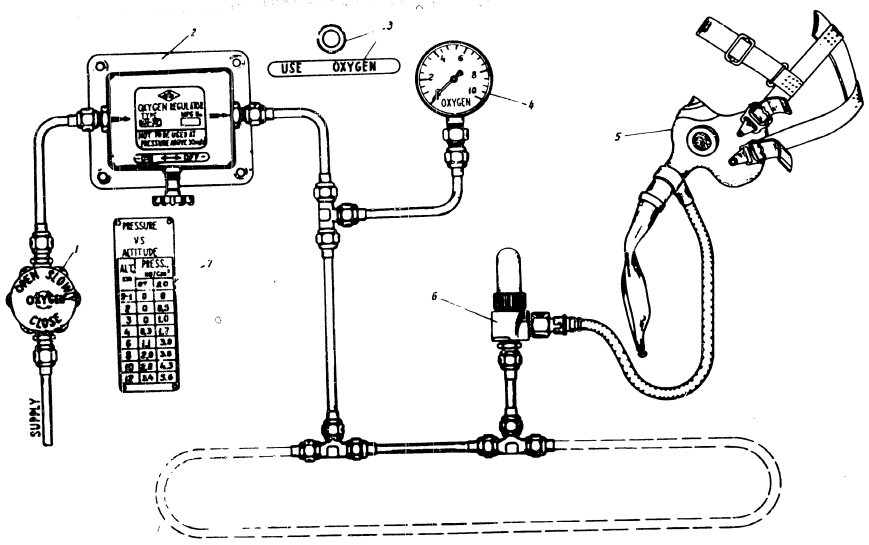

Fig. 13 Group oxygen station.

1-shutoff valve; 2-КП-32 oxygen regulator; 3-signal lamp and placard; 4-МИ-60 pressure gauge; 5-КН-19 mask; 6-ИК-32 oxygen indicator; 7-placard.

Declassified in Part - Sanitized Copy Approved for Release 2011/12/14 : CIA-RDP80T00246A064200070001-1

Declassified in Part - Sanitized Copy Approved for Release 2011/12/14 : CIA-RDP80T00246A064200070001-1

- blue warning lamp with placard "Use oxygen".

Each set of КПЖ-30 oxygen converter (fig.14) comprises:

- КПЖ-30 oxygen converter;
- relief valve;
- МК-18 pressure gauge;
- "ДУЖК-Д" oxygen level indicator transmitter;
- "ДУЖК-У" oxygen level indicator;
- "ДУЖК-Т" oxygen level indicator transformer;
- filler (one for all converters).

The oxygen filling system consists of:

- filler valve (belonging to КПЖ-30 oxygen converter set);
- pipes and six drain valves.

5. Location of Oxygen Equipment Units

Location of crew oxygen stations is shown in fig. 15. The navigator's КП-24М oxygen regulator is installed on the wall of Fr. No. 4, the bag for КМ-16А mask with КВ-5Ф valve is attached to a bracket at Fr. No. 4.

Group oxygen stations are positioned as follows (fig. 16):

- one КП-32 oxygen regulator, КВ-5Ф shut-off valve and pressure gauge with "Pressure vs Altitude" data card are installed on the Fr. No 9 wall (starboard); this regulator feeds ten ИК-32 indicators in the attendants' compartment attendants and the flight crew begin to use oxygen simultaneously;
- five КП-32 regulators, МТ-60 pressure gauge, warning light, "Pressure vs Altitude" data card, two КВ-5Ф valves for right and left systems, two МК-18 pressure gauges controlling pressure in the main line are installed on a special panel attached to the wall of Fr. No 30 at the left.

Declassified in Part - Sanitized Copy Approved for Release 2011/12/14 : CIA-RDP80T00246A064200070001-1

Declassified in Part - Sanitized Copy Approved for Release 2011/12/14 : CIA-RDP80T00246A064200070001-1

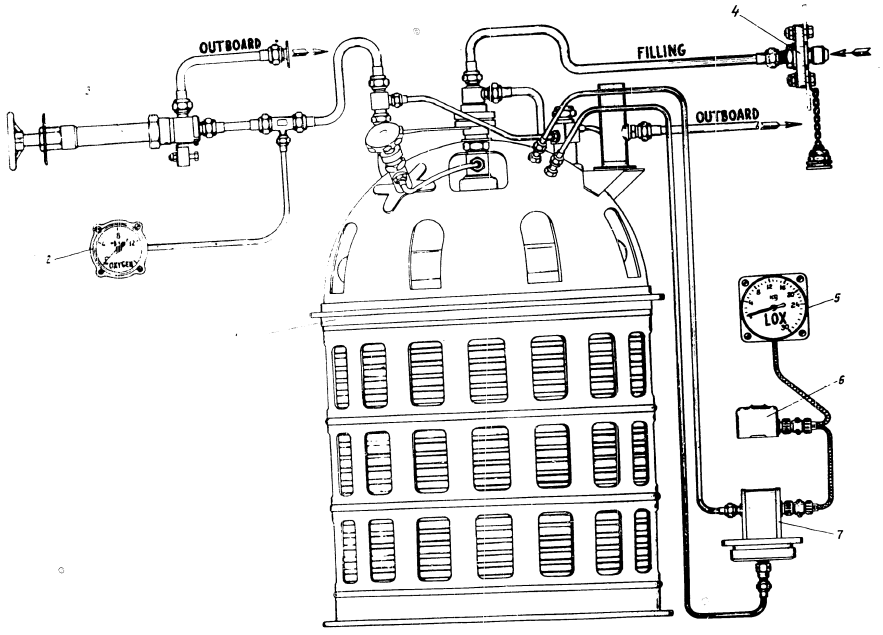

Fig. 14 КПЖ-30 oxygen converter assembly.

1-КПЖ-30 oxygen converter; 2-МЖ-18 pressure gauge; 3-relief valve; 4-filler; 5- ДУЖК-У oxygen lever indicator; 6- ДУЖК-Т oxygen level indicator transformer; 7- ДУЖК-Д oxygen level indicator transmitter.

Declassified in Part - Sanitized Copy Approved for Release 2011/12/14 : CIA-RDP80T00246A064200070001-1

Declassified in Part - Sanitized Copy Approved for Release 2011/12/14 : CIA-RDP80T00246A064200070001-1

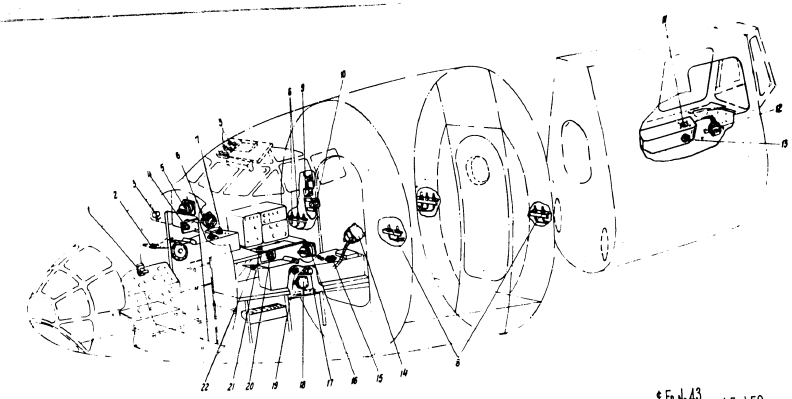

SYSTEM SCHEMATIC

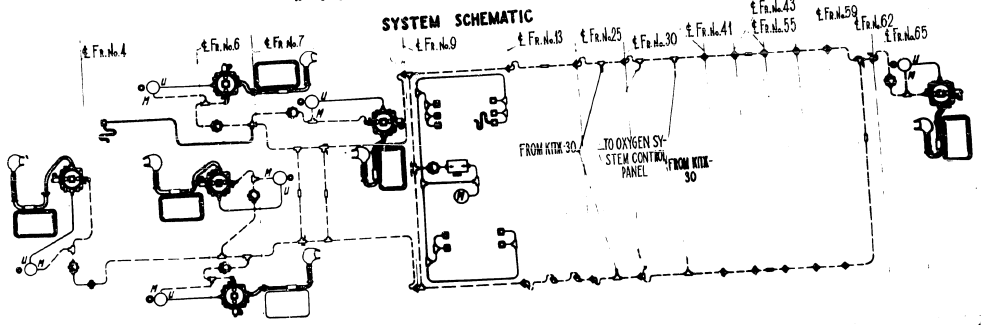

1-navigat ... ygen level indicator; 4-navigator's КВ5Ф oxygen valve; 5- navigator's oxygen regulator; 6-copilot's oxygen regulator; 7-copilot's oxygen valve; 8-oxygen indicators; 9-КП-32 oxygen regulator; 10-МТ-60 pressure gauge; 11-gunner's ИК-24 oxygen indicator; 12-gunner's oxygen regulator; 13-gunner's oxygen valve; 14-first pilot's oxygen regulator; 15-first pilot's oxygen valve; 16-radio-operator's oxygen valve; 17-flight engineer's ИК-24 oxygen indicator; 18-flight engineer's oxygen regulator; 19-flight engineer's oxygen valve; 20-radio-operator's oxygen valve; 21-radio-operator's ИК-24 oxygen indicator; 22-copilot's ИК-24 oxygen indicator.

Declassified in Part - Sanitized Copy Approved for Release 2011/12/14 : CIA-RDP80T00246A064200070001-1

Declassified in Part - Sanitized Copy Approved for Release 2011/12/14 : CIA-RDP80T00246A064200070001-1

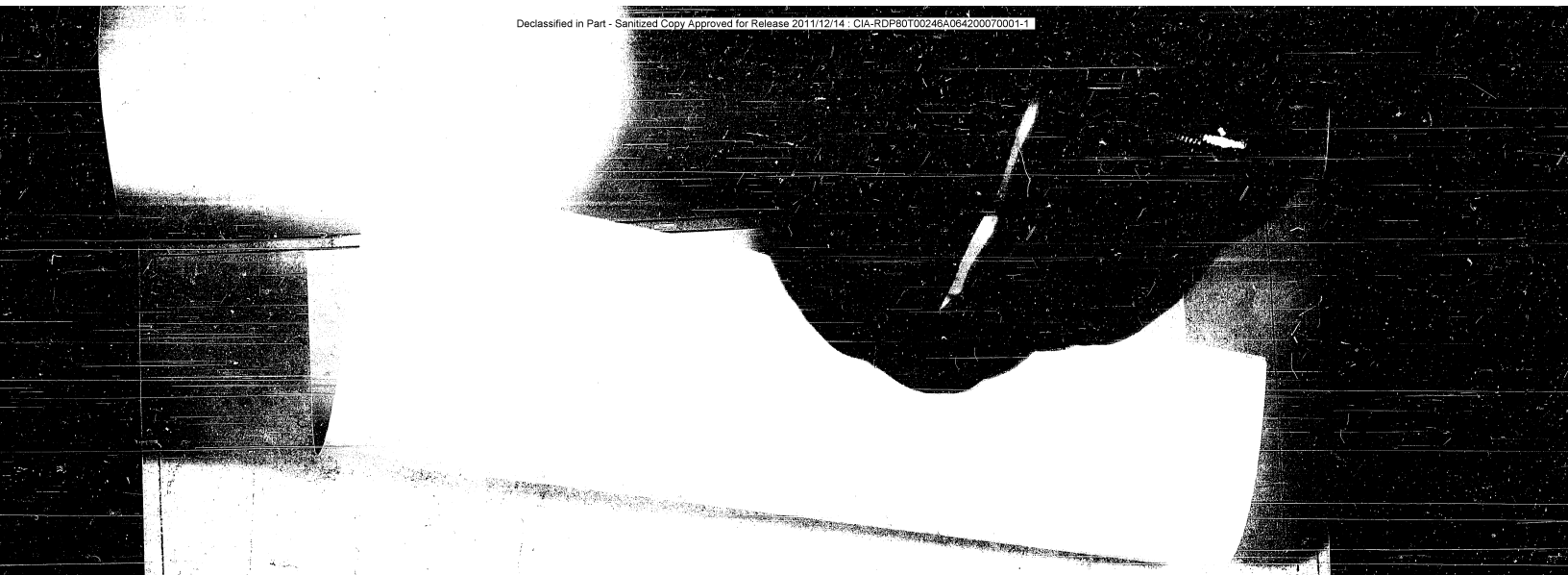

Fig. 15 Location of crew members' oxygen stations.

1-navigator's ИК-24 oxygen indicator; 2-copilot's ИК-24 oxygen indicator; 3-ДУЖ К-У oxygen level indicator; 4-navigator's КВ5Ф oxygen valve; 5-navigator's oxygen regulator; 6-copilot's oxygen regulator; 7-copilot's oxygen valve; 8-oxygen indicators; 9-КП-32 oxygen regulator; 10-МТ-60 pressure gauge; 11-gunner's ИК-24 oxygen indicator; 12-gunner's oxygen regulator; 13-gunner's oxygen valve; 14-first pilot's oxygen regulator; 15-first pilot's oxygen valve; 16-radio-operator's oxygen valve; 17-flight engineer's ИК-24 oxygen indicator; 18-flight engineer's oxygen regulator; 19-flight engineer's oxygen valve; 20-radio-operator's oxygen valve; 21-radio-operator's ИК-24 oxygen indicator; 22-copilot's ИК-24 oxygen indicator.

Declassified in Part - Sanitized Copy Approved for Release 2011/12/14 : CIA-RDP80T00246A064200070001-1

Declassified in Part - Sanitized Copy Approved for Release 2011/12/14 : CIA-RDP80T00246A064200070001-1

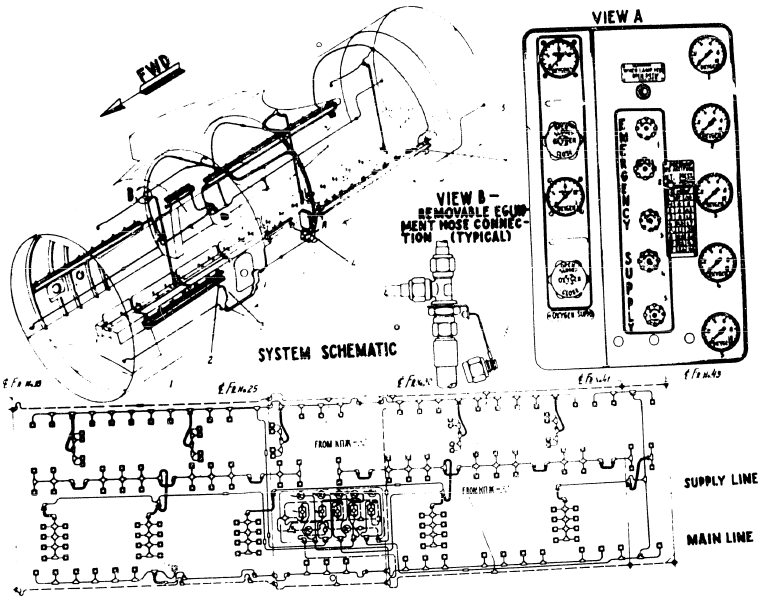

Fig. 16 Cargo compartment oxygen equipment.

1- EX-32 indicator; 2-oxygen hose; 3-K-3 -16 oxygen system accessories; 4-extension hose bag; 5-oxygen system control panel; 6-cap.

Declassified in Part - Sanitized Copy Approved for Release 2011/12/14 : CIA-RDP80T00246A064200070001-1

Declassified in Part - Sanitized Copy Approved for Release 2011/12/14 : CIA-RDP80T00246A064200070001-1

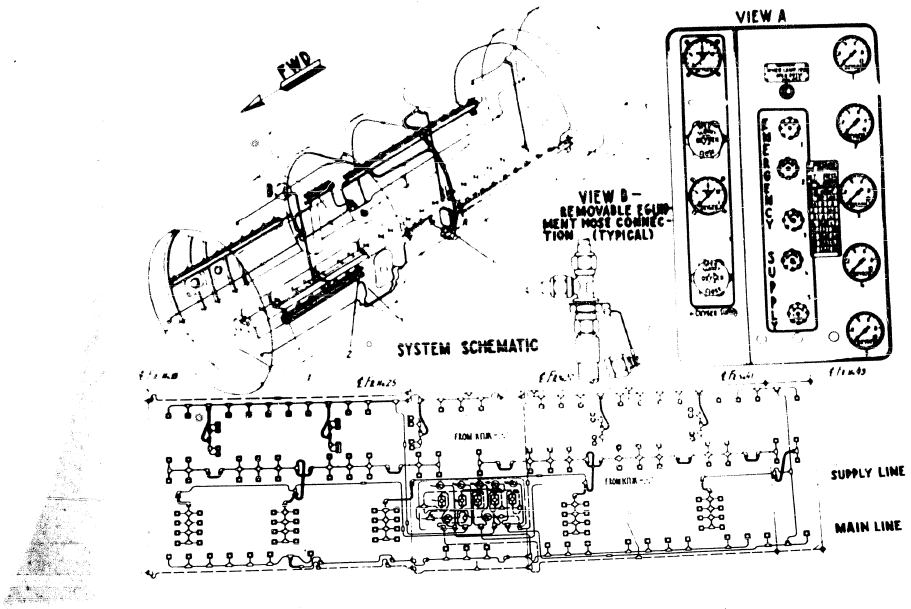

Fig. 16 Crew compartment oxygen equipment.

1- MX-32 indicator; 2-oxygen hose; 3-B-3-36 oxygen system accessories; 4-extension hose bag; 5-oxygen system control panel; 6-cap.

Declassified in Part - Sanitized Copy Approved for Release 2011/12/14 : CIA-RDP80T00246A064200070001-1

Declassified in Part - Sanitized Copy Approved for Release 2011/12/14 : CIA-RDP80T00246A064200070001-1

Oxygen converters are located as follows (see fig. 17)

- КПЖ-30 oxygen converters Nos 1, 2 and 3 are installed on a special rack in the aft luggage compartment between Fr. No. 34 and 35; relief valves and МЖ-19 pressure gauge are installed on the lower part of Fr.No.35; oxygen level indicator transmitters are mounted on special brackets attached to upper flanges of КПЖ-30 oxygen converters;

- КПЖ-30 oxygen converters Nos 4,5 and 6,7 are installed by two on readily removable racks at the left and right sides on the cargo floor between Fr.Nos 27 and 30; relief valves, pressure gauges and transmitters are mounted on special brackets attached to the upper flanges of КПЖ-30 oxygen convertors.

Depending on the aircraft mission, КПЖ-30 oxygen converters installed by two on the cargo floor may be removed and the supply line closed with special caps. To ensure an equal consumption of liquid oxygen from the КПЖ-30 oxygen converters they are connected by two (2-3, 4-5 and 6-7) with gas lines through cut-off valves.

Oxygen level indicators are installed as follows (see fig.15):

- oxygen level indicator of КПЖ-30 converter No.1 - on the right side of the pilots' instrument panel;

-six oxygen level indicators - on a special overhead panel on the copilot's station.

The indicators are switched on by use of a toggle switch on the right side of the pilots' instrument panel.

The seven КПЖ-30 oxygen converters are filled through the filler located on the right landing gear bulge.

On the starboard side of the aft bulkhead between Frs. Nos 34 and 35 there are seven valves for venting gaseous oxygen and avoiding excessive liquid oxygen during fillings. The valves have markers corresponding to those of КПЖ-30 oxygen converters.

Declassified in Part - Sanitized Copy Approved for Release 2011/12/14 : CIA-RDP80T00246A064200070001-1

Declassified in Part - Sanitized Copy Approved for Release 2011/12/14 : CIA-RDP80T00246A064200070001-1

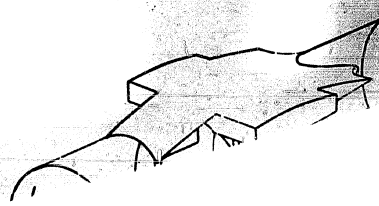

Fig. 17 Location of КПЖ -30 oxygen converters.

1-КПЖ -30 oxygen converters; 2-readily removable frame; 3-cut-off valve; 4-cap; 5-check valve.

Declassified in Part - Sanitized Copy Approved for Release 2011/12/14 : CIA-RDP80T00246A064200070001-1

Declassified in Part - Sanitized Copy Approved for Release 2011/12/14 : CIA-RDP80T00246A064200070001-1

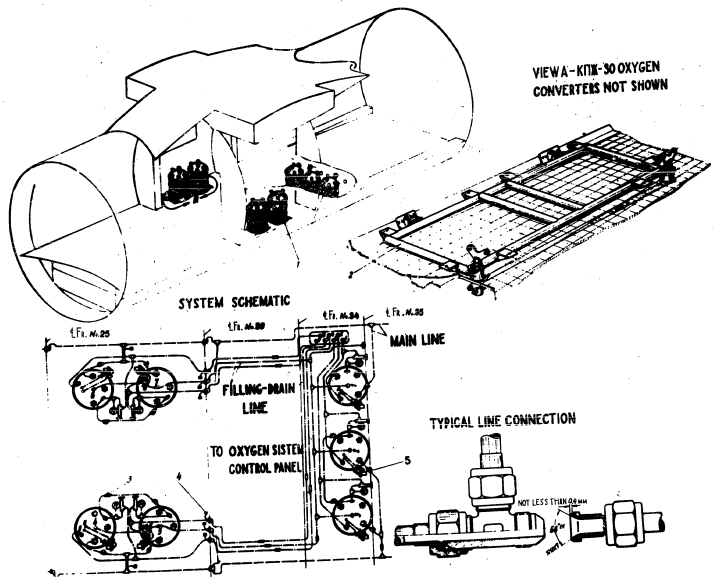

1-КПК-30 oxygen converters; 2-readily removable frame; 3-out-off valve; 4-cap; 5-check valve.

Declassified in Part - Sanitized Copy Approved for Release 2011/12/14 : CIA-RDP80T00246A064200070001-1

Declassified in Part - Sanitized Copy Approved for Release 2011/12/14 : CIA-RDP80T00246A064200070001-1

Five extension hoses (fig. 16) are provided to supply oxygen to the crew and passengers whenever walk-around protection is required. One hose 4 m long is stowed on Fr.No.13 in the forward pressure cabin; four hoses, each 8 m long, are stowed in the cargo compartment (two on the right and left sides of Fr.No.30, and two near Frs.Nos 41 and 42).

CAUTION ! To prevent rupture of the hoses they should be connected to ИК-32 indicators only with КН-19 masks attached.

Oxygen supply to the navigator on duty with СП-1 sextant is provided by use of walk-around unit stowed in a bag on the right bridge adjacent to Fr.No.4.

6. Operation and Technical Data of Oxygen Equipment

КП-24М Oxygen Regulator

КП-24М oxygen regulator is a fixed demand type regulator with a positive pressure mask and is designed to supply oxygen to the flight crew.

Operation (fig.18)

Oxygen from the system flows through an inlet valve into a pressure reducer which reduces the pressure to 3 ÷ 5 kg/cm^2.

Vacuum produced in the mask, hose and the regulator case during inhalation causes the pressure regulator diaphragm (13) to distend inside and open the valve (17).

Oxygen flows from the pressure reducer cavity through the opened valve (17) in two directions:

- into the chamber of the ИК-24 oxygen flow indicator, where the oxygen pressure causes the indicator window to open indicating flow of oxygen;

Declassified in Part - Sanitized Copy Approved for Release 2011/12/14 : CIA-RDP80T00246A064200070001-1

Declassified in Part - Sanitized Copy Approved for Release 2011/12/14 : CIA-RDP80T00246A064200070001-1

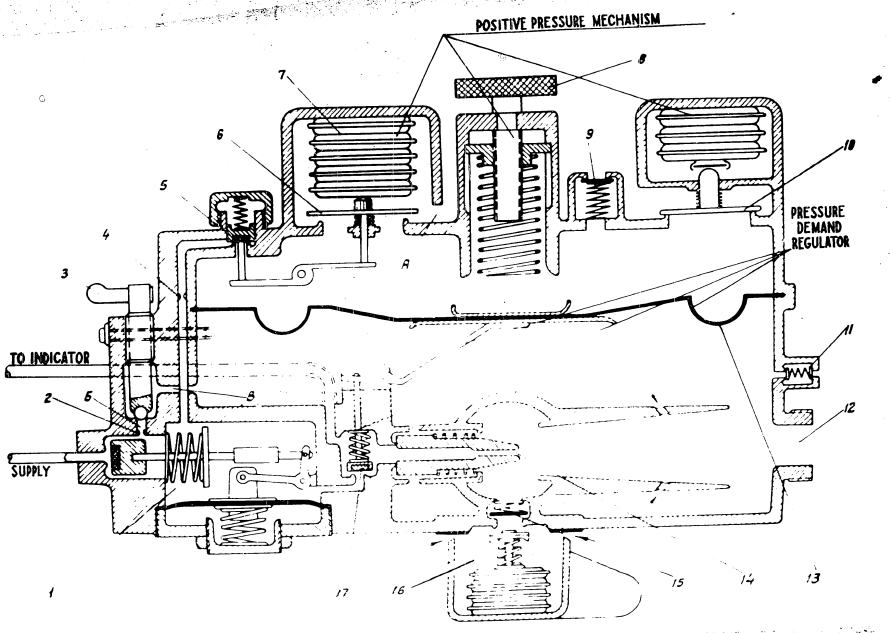

Fig. 18 KII-24 oxygen regulator.

1-pressure reducer; 2-emergency supply nozzle; 3-emergency supply handle; 4-nozzle; 5-control valve; 6- aneroid valve; 7-aneroid; 8- manual pressure regulator; 9- vacuum valve; 10-valve; 11-safety valve; 12-outlet fitting; 13-diaphragm of pressure demand regulator; 14-ejector nozzle; 15-valve; 16-diluter valve; 17-pressure demand regulator valve.

Declassified in Part - Sanitized Copy Approved for Release 2011/12/14 : CIA-RDP80T00246A064200070001-1

Declassified in Part - Sanitized Copy Approved for Release 2011/12/14 : CIA-RDP80T00246A064200070001-1

- to ejector nozzle (14) where due to a high velocity of the oxygen flow the ambient air is drawn in through the diluter switch assembly (16) and mixed with oxygen.

The air oxygen ratio is controlled by an aneroid according to altitude.

At 10000 m altitude dilution (aimed at minimizing oxygen consumption) ceases.

The pressure reducer starts to operate at inhalation simultaneously with the demand type regulator.

Positive pressure is produced in the mask at altitudes above 6000 m.

Oxygen consumption vs altitude

Altitude, km	4	8	10	12
Oxygen flow (l/min)	0	4	not less than 6	8

In case of faintness or hampered breathing the handle (3) should be moved in the "K" position to actuate the emergency oxygen supply. This will cause oxygen to flow continuously from the pressure reducer through the nozzle (2) and channels B and B into the regulator, hose and the mask.

To stop the oxygen flow it is necessary to momentarily shut the outlet valve or exhale into the mask.

Technical Data

1. Oxygen regulator operates at oxygen supply pressure from 30 to 6 kg/cm^2.

2. Reducer static pressure is within 3 to 6 kg/cm^2.

3. Emergency oxygen flow is within 15 to 24 l/min.

4. Oxygen percentage in the air/oxy supplied to the mask depending upon altitude and is kept in the following limits:

Declassified in Part - Sanitized Copy Approved for Release 2011/12/14 : CIA-RDP80T00246A064200070001-1

Declassified in Part - Sanitized Copy Approved for Release 2011/12/14 : CIA-RDP80T00246A064200070001-1

Altitude, km	0	2	4	6	8	10
Oxygen content, %	21-40	27-45	35-55	49-70	62-90	95-100

ИК-24 Oxygen Flow Indicator

ИК-24 oxygen indicator is designed for use with the КП-24 fixed oxygen regulator.

The ИК-24 oxygen indicator is installed in [illegible] aircraft equipped with КПЖ-30 oxygen converters, as the pressure gauge of the indicator is designed for maximum pressure of 16 kg/cm^2.

The ИК-24 indicator controls the operation of the КП-24 oxygen regulator and indicates the presence of pressure in the main system.

КП-23 Bailout Kit

The КП-23 bailout kit is designed to provide oxygen for the crew members in case of bail out at altitudes up to 13000 m or in case of descent to safety altitude if the aircraft oxygen regulator fails during high-altitude flight.

КП-32 Oxygen Regulator

The КП-32 oxygen regulator is of a constant-flow type and permits simultaneous supply of oxygen to twenty persons at altitudes up to 12000 m.

The regulator consists of two pressure reducers (stages I and II) connected in series.

The first stage reduces the pressure of oxygen delivered by the oxygen distribution system to 10.5 kg/cm^2; the second stage reduces the pressure to the level required for adequate oxygen supply, depending on flight altitude. Oxygen supply is controlled automatically by an aneroid which regulates pressure in the reducer cavity.

Declassified in Part - Sanitized Copy Approved for Release 2011/12/14 : CIA-RDP80T00246A064200070001-1

Declassified in Part - Sanitized Copy Approved for Release 2011/12/14 : CIA-RDP80T00246A064200070001-1

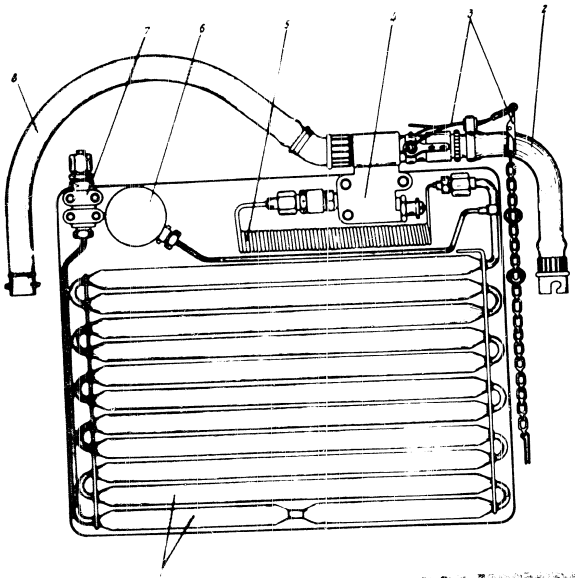

Fig. 19 КП-23 survival oxygen kit

1-bottles; 2-hose; 3-pullout chain; 4-reversing valve;
5-capillary tube; 6-pressure gauge; 7-filler valve; 8-hose.

Declassified in Part - Sanitized Copy Approved for Release 2011/12/14 : CIA-RDP80T00246A064200070001-1

Declassified in Part - Sanitized Copy Approved for Release 2011/12/14 : CIA-RDP80T00246A064200070001-1

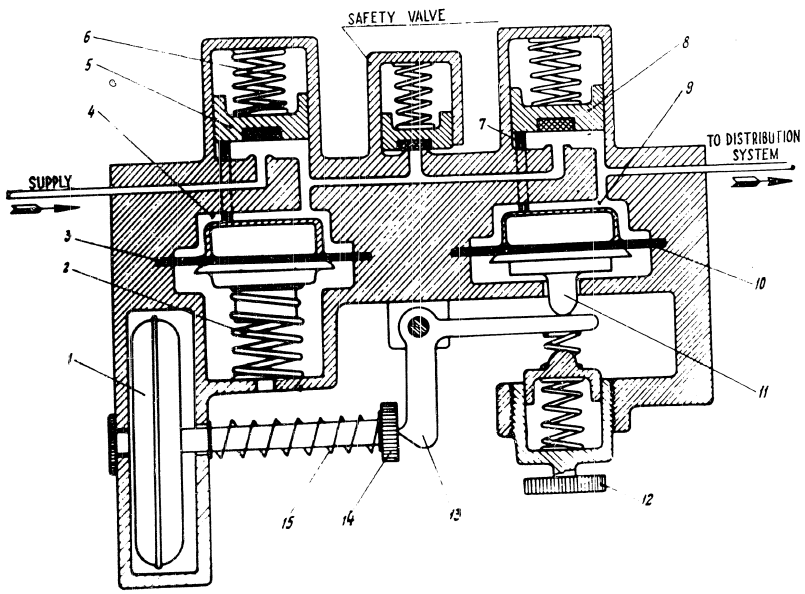

Fig. 20 КП-32 oxygen regulator

1-aneroid; 2- spring; 3-diaphragm; 4- first stage reducer; 5-first stage reducer valve; 6- locking spring; 7-push-rod; 8-second stage reducer valve; 9-second stage reducer; 10-diaphragm; 11-push-rod; 12-manual control; 13-lever; 14-rod; 15-spring.

Declassified in Part - Sanitized Copy Approved for Release 2011/12/14 : CIA-RDP80T00246A064200070001-1

Declassified in Part - Sanitized Copy Approved for Release 2011/12/14 : CIA-RDP80T00246A064200070001-1

If the regulator functions properly, pressure in the supply system will vary with altitude according to values given in table below.

Altitude, km	2	3	4	6	8	10	12
Pressure, kg/cm^2	0-0.5	0-1	0.3-1.7	1.1-3.0	2-3.8	2.8-4.3	3.4-5.6

The oxygen regulator is provided with a manual control (12) for use in case of insufficient oxygen supply to the mask. This control may also be used at low altitudes and on the ground.

Technical Data

1. Regulator operates at oxygen supply pressure from 30 to 6 kg/cm^2.

2. With 20 indicators operating oxygen flow per passenger according to altitude will be as given below:

Altitude, km	2	3	4	6	8	10	12
Oxygen flow l/min	0-1.5	0-2.0	1.0-3.0	2.0-4.5	3.0-5.5	4.0-6.5	4.7-7.0

3. At manual control oxygen flow varies from 0 to 8 $^{+4.0}_{-3.5}$ l/min.

4. Static pressure in the regulator does not exceed 10.5 kg/cm^2.

5. Safety valve opens at pressure 13 $^{+5}_{-1.5}$ kg/cm^2.

MK-32 Oxygen Flow Indicator (Fig. 21)

Oxygen flow indicator serves to connect the oxygen mask, provide proper oxygen rationing and indicate flow of oxygen to the mask.

When oxygen flows through the indicator, the float (5) remains in the upper position (indicating flow of oxygen). The float has a slot filled with fluorescent substance to make it more noticeable.

Oxygen flow through the MK-32 indicator is 2.5 ±0.1 l/min at

Declassified in Part - Sanitized Copy Approved for Release 2011/12/14 : CIA-RDP80T00246A064200070001-1

Declassified in Part - Sanitized Copy Approved for Release 2011/12/14 : CIA-RDP80T00246A064200070001-1

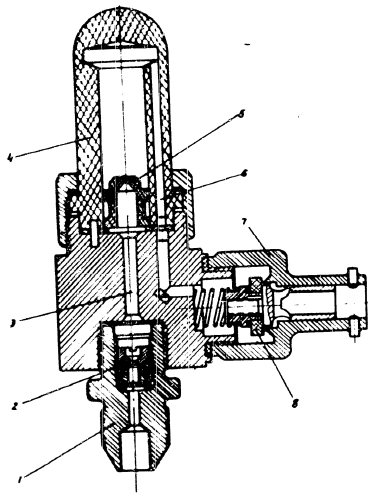

Fig. 21 ИК-32 oxygen indicator.

1-inlet fitting; 2-nozzle; 3-hole; 4-cap; 5-float; 6-hole; 7-outlet fitting; 8- check valve.

Declassified in Part - Sanitized Copy Approved for Release 2011/12/14 : CIA-RDP80T00246A064200070001-1

Declassified in Part - Sanitized Copy Approved for Release 2011/12/14 : CIA-RDP80T00246A064200070001-1

inlet pressure 1 kg/cm^2.

The indicator float rises at inlet pressure not more than 1500 mm W.C. and falls when there is no pressure.

KM-19 Oxygen Mask (Fig. 22)

The KM-19 oxygen mask is designed for use with regulator of constant-flow type.

In the nose part (6) of the rubber mask there is a built-in spring (7) to ensure a close fit of the mask to the face. On the sides of the mask there are two sockets (5) filled with air-permeable sponge rubber and providing a vent to the ambient air. For additional capacity the mask is connected with a rubber bag (3) through a plastic tee (4).

KIIЖ-30 Oxygen Converter

The KIIЖ-30 oxygen converter is designed for storage of liquid oxygen and supply of gaseous oxygen, at a certain pressure, for oxygen breathing equipment.

Operation (Fig. 23)

The converter is filled with liquid oxygen through a filler valve (7) and a central line with a check valve (6) in its upper part.

During filling the valve is kept opened under pressure from supply cart and liquid oxygen is allowed to flow into the bottle (2).

Gaseous oxygen formed in the process of filling is vented through a V-tube into annular space in the converter throat and overboard thro[redacted] a relief valve (12).

The filling operation is carried out until liquid oxygen spits through valve (10) indicating that the converter is full.

Declassified in Part - Sanitized Copy Approved for Release 2011/12/14 : CIA-RDP80T00246A064200070001-1

Declassified in Part - Sanitized Copy Approved for Release 2011/12/14 : CIA-RDP80T00246A064200070001-1

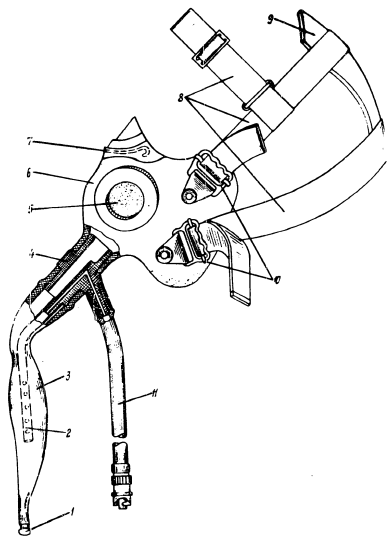

Fig. 22 KM-19 oxygen mask

1-plug; 2-perforated tube; 3-rubber bag; 4-T-fitting; 5-valves; 6-rubber mask; 7-spring; 8-straps; 9-head-strap; 10-clamps; 11-oxygen supply hose.

Declassified in Part - Sanitized Copy Approved for Release 2011/12/14 : CIA-RDP80T00246A064200070001-1

Declassified in Part - Sanitized Copy Approved for Release 2011/12/14 : CIA-RDP80T00246A064200070001-1

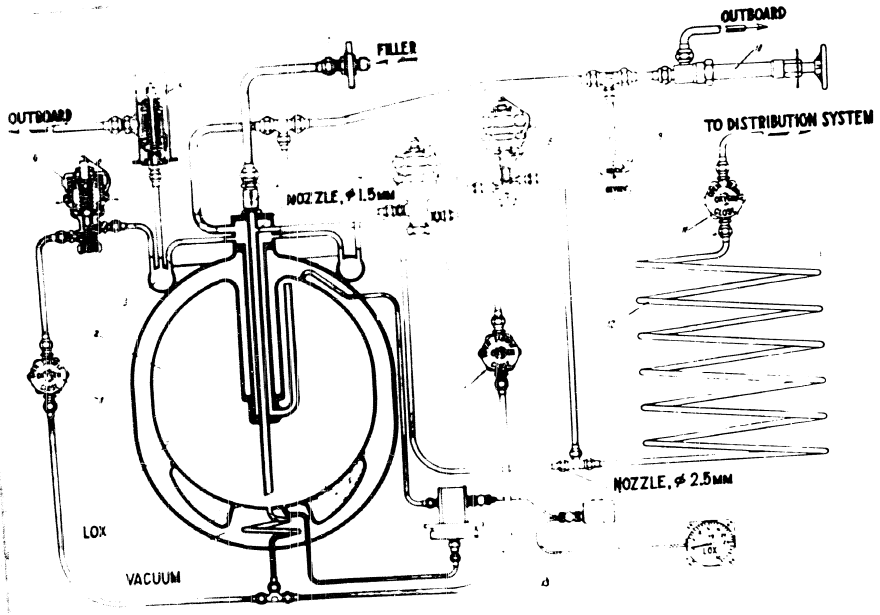

Fig. 29 [illegible] 30 oxygen converter.

1-valve; 2-bottle; 3-receiver; 4- pressure [illegible]; 5-safety valve; 6-check valve; 7-filler; 8-relief valve; 9-pressure gauge; 10-relief valve; 11-shutoff valve; 12-evaporation coil; 13-oxygen level indicator.

Declassified in Part - Sanitized Copy Approved for Release 2011/12/14 : CIA-RDP80T00246A064200070001-1

Declassified in Part - Sanitized Copy Approved for Release 2011/12/14 : CIA-RDP80T00246A064200070001-1

To make the converter ready for use it is necessary to build up pressure in the bottle /valve (10) must be closed/.

The pressure in the bottle is indicated by a pressure gauge (9).

Pressure is built-up by means of two pressure build-up valves (4).

When valves (1) are opened, liquid oxygen, partially evaporated, starts flowing (under the pressure of static liquid column) from the lower part of the bottle through a pressure build-up valve (4) into receiver (3) and then, already in gaseous state, through the annular space in the "neck" and V-tube into the gas cavity of the bottle, which results in building-up pressure in the bottle.

When pressure in the bottle reaches 8-8.5 atm, valves (4) are closed and gas flow to the receiver is cut off.

If the pressure in the bottle drops below 8-8.5 atm, valves (4) are automatically opened resuming the flow of gaseous oxygen into the bottle. Building up operating pressure in the converter filled with liquid oxygen for not less than 60 percent takes from 3 to 10 minutes. The level of liquid oxygen is shown by indicator (13).

If gaseous oxygen is not consumed, the pressure in the converter will continue to rise due to partial evaporation of liquid oxygen.

When the pressure reaches 11-11.8 atm, safety valve (5) will open, venting excessive oxygen overboard.

For the converter ready for use (i.e. with valves (1) opened) the time from the beginning of pressure build-up till the opening of safety valve (5) depends on extent of filling, rate of evaporation and degree of bottle warming before filling and lies within 4-6 hours. During this period the heat, conducted to the bottle, is expended for vaporizing liquid oxygen.

Declassified in Part - Sanitized Copy Approved for Release 2011/12/14 : CIA-RDP80T00246A064200070001-1

Declassified in Part - Sanitized Copy Approved for Release 2011/12/14 : CIA-RDP80T00246A064200070001-1

In operation when oxygen is drawn from the converter, the difference of pressure in the bottle and aircraft gaseous oxygen line causes liquid oxygen to flow into evaporating coil 12, where it evaporates and is warmed (due to heat-exchange) to the temperature 5-5°C lower than ambient temperature.

Gaseous oxygen from the evaporating coil flows into the aircraft main line through a shut-off valve (11), the pressure in the converter being automatically maintained at constant level of 8-8.5 atm. by means of pressure build-up valves (4). At maximum flow equal to 5 kg/hr during the first hour after pressure build-up, pressure may decrease by 0.3÷0.5 kg/cm^2 below 8 atm.

If oxygen flows from the converter at a rate less than the rate of evaporation and the temperature of liquid oxygen is sufficiently high, the pressure in the converter may rise. When the pressure reaches 10 atm., relief valve (8) will open allowing a delivery of gaseous (instead of liquid) oxygen from the gas cavity of the bottle through the central tube in the bottle neck; this will prevent further pressure rise.

For normal operation of the relief line two orifices of 1.5 and 0.8 mm diam. are provided on the way of liquid oxygen from the bottle to the lower turn of the evaporating coil. The orifices serve to increase the resistance on the way of liquid oxygen from the bottle to the evaporating coil.

Technical Data

1. Bottle capacity (water) - 28 l.
2. Oxygen quantity - fully serviced - 32 kg.
3. Oxygen quantity - useable - 30 kg.
4. Operating pressure:
   max. - 10 atm
   min. - 8 atm.

Declassified in Part - Sanitized Copy Approved for Release 2011/12/14 : CIA-RDP80T00246A064200070001-1

Declassified in Part - Sanitized Copy Approved for Release 2011/12/14 : CIA-RDP80T00246A064200070001-1

5. Safety valve opening pressure - 11.0 ÷ 11.8 atm.

6. Maximum oxygen flow - 6 kg/hr.

7. Permissible oxygen evaporation (oxygen losses from evaporation when stored in the bottle under normal pressure at ambient temperature 15 ± 5°C) - not more than 250 g/hr.

ДУЖКOxygen Level Indicator

The ДУЖК oxygen level indicator is designed for remote measuring quantity of liquid oxygen in the КПЖ-30 converter.

The oxygen level indicator system consists of:

- ДУЖК-У indicator for the first КПЖ-30 converter, installed on the right panel of pilots' instrument board;

- six ДУЖК-У indicators for the other six КПЖ-30 converters, installed on the pilots' overhead electric panel;

- seven ДУЖК-Д transmitters, one on each КПЖ-30 converter;

- seven ДУЖК-Т step-down transformers, installed under the copilot's rack.

Declassified in Part - Sanitized Copy Approved for Release 2011/12/14 : CIA-RDP80T00246A064200070001-1

Declassified in Part - Sanitized Copy Approved for Release 2011/12/14 : CIA-RDP80T00246A064200070001-1

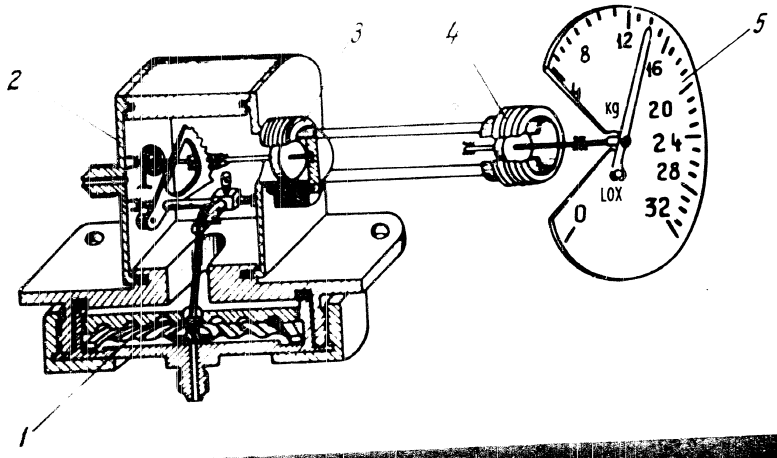

Fig. 24 Oxygen level indicator.

1- diaphragm; 2-transmitter; 3-transmitter /selsyn/; 4- motor /selsyn/; 5-indicator.

Declassified in Part - Sanitized Copy Approved for Release 2011/12/14 : CIA-RDP80T00246A064200070001-1

Declassified in Part - Sanitized Copy Approved for Release 2011/12/14 : CIA-RDP80T00246A064200070001-1

SECTION III

PHOTOGRAPHIC EQUIPMENT

Provisions are made in the aircraft for installation of АФА-42 cameras for daylight photography with focal length of 50 or 75 cm. The cameras are installed alternately.

The АФА-42/50 or АФА-42/75 cameras are installed in set with the АКАФУ-33М automatic camera tilting mount providing one and two-strip photography.

7. Installation and Location of Photographic Equipment

The cameras are mounted on a frame above the camera hatch in the rear cargo door.

There are four external brackets on the frame for attachment of the АКАФУ-33М camera mount.

To ensure normal operation of the АФА-42/50 and АФА-42/75 cameras, it is essential that the distance between the frame axis and the АКАФУ-33М axis of tilt should be kept at 115 ± 5 mm, when installing the АКАФУ-33М camera mount.

The cameras are held in the vertical position by means of an adjustable rod.

Control units of the cameras (fig.25) are installed (alternately) on the navigator's station on a special panel.

The camera hatch doors are opened and closed by an УР-10 electromotor, controlled by a switch on the navigator's starboard panel.

When the doors are closed the cameras are de-energized.

8. Technical Data of the АФА-42/50 and АФА-42/75 Cameras

The АФА-42 is a remote controlled camera with an image motion optical compensator and is designed for route and area photography.

Declassified in Part - Sanitized Copy Approved for Release 2011/12/14 : CIA-RDP80T00246A064200070001-1

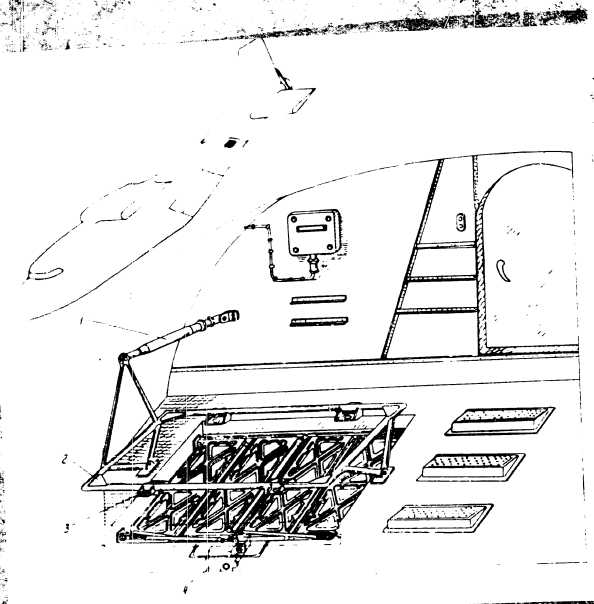

Fig. 23 Camera hatch with frames.

[illegible] 2-frame for installation of АФА-42/50 or 75 [illegible] -33 mount; 3-brackets mounting for the АКАФУ-33 [illegible] 4-doors electrical actuator.

Declassified in Part - Sanitized Copy Approved for Release 2011/12/14 : CIA-RDP80T00246A064200070001-1

Declassified in Part - Sanitized Copy Approved for Release 2011/12/14 : CIA-RDP80T00246A064200070001-1

The АФА-42 camera set consists of:

- АФА-42 camera;
- control unit;
- electric cords;
- heating cover.

Technical Data

	АФА-42/50	АФА-42/75
Lens type	Индустар.52	Телемар.2
Focal length	50 cm	75 cm
Angle of view	33°30'	23°
Shutter type	louver	louver
Altitude range for photography	2-10 km	3-15 km
Speed range for photography	500-3000 km per hr	500-3000 km per hr
Exposure	1/150; 1/300 sec	1/600; 1/1200 sec

1. Photo size 30 x 30 cm.
2. Number of photos up to 195.
3. Film size for loading 32 x 6000 cm (the film is perforated).
4. The film is leveled in the focal plane by pressing the film magazine plate to the focal plane contact glass.
5. The camera is provided with an optical image motion compensator consisting of two rotating optical wedges.
6. Current consumption (АКАФУ -33М excluded)
   - at + 15°C - 25°C (without heating) - up to 10 amp;
   - at - 60°C temperature - up to 17 amp.
7. The electrical heating elements are switched on and off automatically by a thermoregulator.

Declassified in Part - Sanitized Copy Approved for Release 2011/12/14 : CIA-RDP80T00246A064200070001-1

Declassified in Part - Sanitized Copy Approved for Release 2011/12/14 : CIA-RDP80T00246A064200070001-1

The АКАФУ -33М camera tiling Mount

The АКАФУ-33М camera tiling mount serves for mounting and operation of the АФА-42 cameras with 50 or 75 cm focal length. The АКАФУ-33М is designed for automatic operation in set with the АФА-42 camera. The mount is remote controlled by the camera control unit. The АКАФУ -33М mount and camera combination allows to extend the panoramic view and take two-strip plan pictures with 20% overlapping during one run (for photographing).

The АКАФУ -33М camera mount set consists of:

- camera mount frame;
- tilting frame;
- electrical actuator.

The АКАФУ -33М Technical data

1. The АКАФУ -33М camera mount operates on 27 v d-c ± 10%.
2. Current consumption at 27 v with camera installed:
   - at temperature from 15°C to 25°C - up to 3 amp;
   - at temperature - 60°C - up to 5 amp.
3. The АКАФУ -33М cycle time (displacement from one extreme position to the other) at 27 v is not more than 1.5 sec.
4. The АКАФУ -33 camera mount provides the following camera tilt angles:

АФА-42 camera focal length	Two-strip photography
x = 50 cm	$13^\circ\ ^{+30^\circ}_{-1^\circ}$
x = 75 cm	$8.5^\circ\ ^{+30^\circ}_{-1^\circ}$

Declassified in Part - Sanitized Copy Approved for Release 2011/12/14 : CIA-RDP80T00246A064200070001-1

Declassified in Part - Sanitized Copy Approved for Release 2011/12/14 : CIA-RDP80T00246A064200070001-1

The AKAФV -33M camera tilting mount

The AKAФV -33M camera tilting mount serves for mounting and operation of the AФA-42 cameras with 50 or 75 cm focal length. The AKAФV-33M is designed for automatic operation in set with the AФA-42 camera. The mount is remote controlled by the camera control unit. The AKAФV -33M mount and camera combination allows to extend the normal view and take two-strip plan pictures with 20% overlapping during one run (for photographing).

The AKAФV -33M camera mount set consists of:

- camera mount frame;
- tilting frame;
- electrical actuator.

The AKAФV -33M Technical data

1. The AKAФV -33M camera mount operates on 27 v ± 10%.
2. Current consumption at 27 v with camera installed:
   - at temperature from 15°C to 25°C - up to ½ amp;
   - at temperature - 60°C - up to ¾ amp.
3. The AKAФV -33M cycle time (displacement from one extreme position to the other) at 27 v is not more than 1.5 sec.
4. The AKAФV -33 camera mount provides the following camera tilt angles:

AФA-42 camera focal length	Two-strip photography
f = 50 cm	13° +30° -1°
f = 75 cm	8.5° +30° -1°

Declassified in Part - Sanitized Copy Approved for Release 2011/12/14 : CIA-RDP80T00246A064200070001-1

Declassified in Part - Sanitized Copy Approved for Release 2011/12/14 : CIA-RDP80T00246A064200070001-1

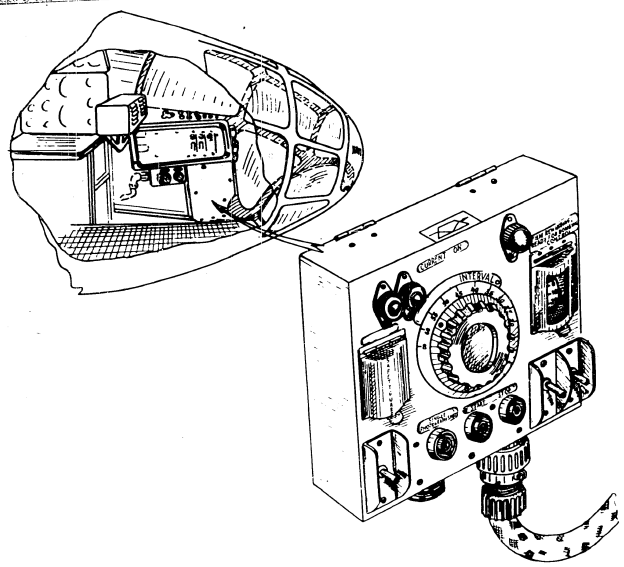

Fig. 26 Camera control unit

Declassified in Part - Sanitized Copy Approved for Release 2011/12/14 : CIA-RDP80T00246A064200070001-1

Declassified in Part - Sanitized Copy Approved for Release 2011/12/14 : CIA-RDP80T00246A064200070001-1

SECTION IV

RADIO EQUIPMENT

8. General Description

The radio equipment installed in the aircraft provides for:

- reliable two way air-to-air and air-to-ground radio telephone-telegraph communication;
- inter-crew communication;
- solution of radio navigation problems;
- measurement of true altitude of the aircraft in flight;
- automatic transmission of national identification signals;
- flying and landing approach during unfavourable weather conditions, day or night;
- display of a general terrain picture under the aircraft in flight on an oscilloscope tube in the form of outlines of different intensity.

For these purposes the following radio equipment is installed in the aircraft:

- 1-РСБ-70 (р-807) radio communication station with РПС receiver;
- РСБ-5 (р-809) short-wave command and stand-by communication station with СВБ-5 medium wave unit and УС-8 receiver;
- РСИУ-4П ultrashort wave command radio station (two sets);
- АРК-5 automatic direction finder with remote control (two sets);
- МРП-56П marker beacon receiver;
- СП-50 "Материк" instrument landing system;
- СПУ-7 aircraft intercom system;
- РВ-2 radio altimeter;
- РБП-3 panoramic radar;

Declassified in Part - Sanitized Copy Approved for Release 2011/12/14 : CIA-RDP80T00246A064200070001-1

Declassified in Part - Sanitized Copy Approved for Release 2011/12/14 : CIA-RDP80T00246A064200070001-1

- CPO-1 identification responder;
- " Сирена -2" station;
- " Гамма -5Д" radar range finder;
- АВРА-45 emergency radio station.

Locations of radio equipment antennas are shown in fig. 27.

10. 1-РСБ-70 Radio Station with БСВ-70 Medium Wave Unit and РПС Receiver

P-807

The 1-РСБ-70 radio station in set with the РПС receiver is an airborne transmitting-receiving station providing simplex and semi-duplex telephone-telegraph communication between the aircraft and the ground or between the aircraft and another aircraft in flight.

The 1-РСБ-70 radio station operates in the 2000 to 18100 kc band (the main short wave band) and 300 to 1500 kc band (additional medium wave band).

The 1-РСБ-70 radio station comprises РПС receiving unit designed for receiving C.W. and voice-frequency radio-telegraph signals and modulated radio-telephone signals.

The transmitter may be controlled directly by the radio operator and with remote control - by the copilot.

Transmission and reception is accomplished via micro-telephone circuits of СПУ -7 intercom system (СПУ -7 intercom subset mode selector switch should be in the "СР" position).

The 1-РСБ-70 radio station comprises:

- transmitter installed on a shock-absorbing frame;
- БСВ-70 medium wave unit;
- КУ-70-П switching unit;
- remote control panel;
- telegraph key;
- "МВУ" microphone;

Declassified in Part - Sanitized Copy Approved for Release 2011/12/14 : CIA-RDP80T00246A064200070001-1

Declassified in Part - Sanitized Copy Approved for Release 2011/12/14 : CIA-RDP80T00246A064200070001-1

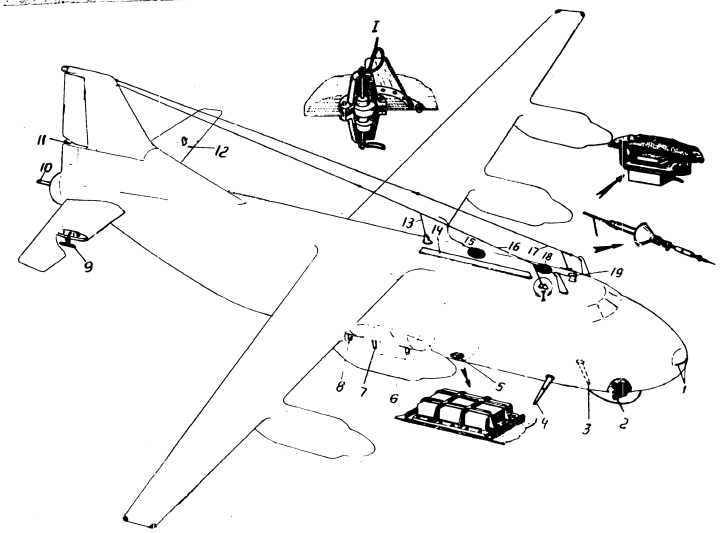

Fig. 27 antennas locations.

1-КРП-2 receiving antenna; 2-РПБ-В receiving-transmitting antenna; 3-РСИУ-4П No.1 receiving-transmitting antenna; 4-РСИУ-4П No.2 receiving-transmitting antenna; 5-МРП-56П receiving antenna; 6-СД-1М transmitting antenna; 7-СРО-1 antenna; 8-СД-1М receiving antenna; 9-РВ-2 receiving antenna; 10-"Gamma-54T" receiving-transmitting antenna; 11-"Syrena-2" receiving antenna; 12-РВ-2 receiving antenna; 13-АРК-5 No.2 receiving rod-type antenna; 14-АРК-5 No.1 receiving folded-dipole antenna; 15- АРК-5 No.2 loop antenna; 16-1-РСБ-70 and РПС receiving-transmitting antenna; 17-РСБ-5 and УС-8 receiving-transmitting antenna; 18-АРК-5 No.1 loop antenna; 19-КРП-Ф receiving antenna.

Declassified in Part - Sanitized Copy Approved for Release 2011/12/14 : CIA-RDP80T00246A064200070001-1

Declassified in Part - Sanitized Copy Approved for Release 2011/12/14 : CIA-RDP80T00246A064200070001-1

- У-600 power source;
- cables and insulators spare set;
- box with spare tubes;

The РПС receiver set includes:

- РПС receiver;
- rectifier-unit "В".

The 1-РСБ-70 radio station operates with an external fixed antenna in the form of a slant beam made of bronze stranded conductor. The antenna is 19.1 m long and is suspended between the starboard mast and the aircraft fin. The 1-РСБ-70 antenna is used for the РПС receiver operation as well.

А Б 1379А blocking relay is connected to the antenna fair-lead circuit of the РПС receiver for switching off the РПС receiver when the РСБ-5 radio set operates for transmission.

The 1-РСБ-70 radio station and the РПС receiver units are located as follows (fig. 28):

- transmitter - on a removable shock-absorbing frame on the radio operator's rack between fr. Nos 8 and 9; to remove the transmitter it is necessary to disconnect the antenna, grounding wire and electrical cables, and to loosen the fasteners in the front part of the transmitter; installation of the transmitter is performed in the reversed sequence;
- remote control panel - in the rear part of the pilot's console;
- КУ-7П unit - overhead, between fr. Nos 8 and 9 (starboard);
- БОВ-70 units - on a special rack above the 1-РСБ-70 transmitter;
- telegraph key - on the radio-operator's table, left of the РСБ-5 telegraph key;

Declassified in Part - Sanitized Copy Approved for Release 2011/12/14 : CIA-RDP80T00246A064200070001-1

Declassified in Part - Sanitized Copy Approved for Release 2011/12/14 : CIA-RDP80T00246A064200070001-1

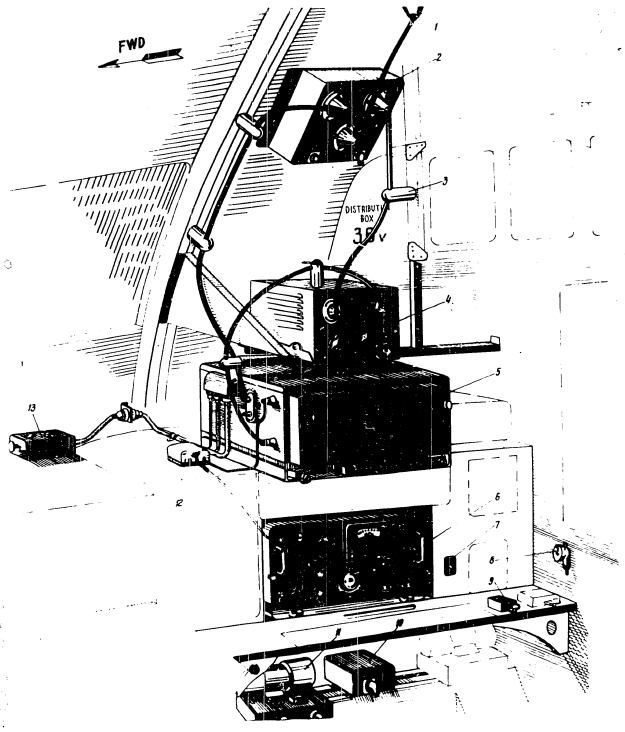

Fig. 28 1-РСБ-70 radio set and РПТ receiver location.

1-antenna fairlead partition insulator; 2-switching unit; 3-stand-off insulators; 4-medium wave block; 5-1-РСБ-70 transmitter; 6-РПТС receiver; 7-1-РСБ-70 radio set self-audio switch; 8-micro-phone; 9-telegraph key; 10-rectifier; 11-У-600 dynamotor; 12-antenna blocking relay; 13-remote control panel.

Declassified in Part - Sanitized Copy Approved for Release 2011/12/14 : CIA-RDP80T00246A064200070001-1

Declassified in Part - Sanitized Copy Approved for Release 2011/12/14 : CIA-RDP80T00246A064200070001-1

– У-500 power unit and the РПС receiver rectifier – on a special rack under the radio operator's table;

– microphone is suspended on a hook on Fr. No. 9, above the radio operator's table;

– box with spare tubes – on the cabin floor under the left rack at Fr. No. 9 and is secured with a shock cord;

– РПС receiver – on the rack at the radio operator's station between Fr. Nos 8 and 9, on a special shock-absorbing frame under the 1-РСБ-70 transmitter; to remove the receiver it is necessary to disconnect the grounding wire and antenna from their respective terminals, loosen the fasteners and take the receiver off the mounting frame; for installation of the receiver the procedure should be reversed; the receiver installed, the fasteners should be properly locked.

Bunches and cables of the radio station are laid along the starboard side of the flight deck and are attached to the airframe with rubber-padded clamps.

Notes on Operation

1. The 1-РСБ-70 radio station is fed from the radio operator's "РК Радиста" 27 v d.c. distribution box only. An ИП-5С inertial fuse is installed in the protection circuit. The 1-РСБ-70 radio station power switch is on the front transmitter panel.

2. The РПС receiver and its power unit is fed from the primary "РК 115 v" bus with 115 v a.c. 400 cps only. A ЗП-2 fuse is installed in the protection circuit. The receiver power switch is located on the РПС front panel.

3. Operation of the radio set units involves high voltages, dangerous to life, therefore prior to removing or adjusting the set, inspecting the set wiring or replacing fuses and tubes, the radio set power supply should be switched off.

Declassified in Part - Sanitized Copy Approved for Release 2011/12/14 : CIA-RDP80T00246A064200070001-1

Declassified in Part - Sanitized Copy Approved for Release 2011/12/14 : CIA-RDP80T00246A064200070001-1

4. During operating of the radio set it is necessary to regularly check the condition of the У-600 power unit, commutators and brushes. Heavy sparking of brushes may cause failure of the unit.

5. When channels are being selected, all knobs must be turned clockwise.

6. The radio operator should remember, that when control of the set is transferred to the copilot's panel the telegraph key toggle switch should be closed (in the "ПРД-полудуплекс" position).

7. When the radio set is being tuned, it is prohibited to perform any switching [redacted] when the telegraph key, microphone button or "Check" knob are depressed.

8. Antenna fair-leads connecting the 1-РСБ-70 radio station units should be located not closer than 50 mm to metal parts of the airframe.

9. During ground test of the crew cabin for pressurization the У-600 power unit must be removed for it contains a barometric relay which may be damaged at pressure above 780 mm Hg.

[redacted]:

1. To tune the radio set at frequences less than 300 kc.

2. To operate the "Л" knob or the "ПС-ПР" tumbler switch in any way when the telegraph key, microphone button and "Check" switch are depressed.

3. To operate the set in the "Radio" ("ТЛФ") or "Telegraph modulation" (МТЛГ) mode with altitudes in the cabin exceeding 4500 m.

11. РСБ-5/230 Radio Command Station with СВБ-5 Medium Wave Unit and УС-8 Receiver

The РСБ-5 radio station used in set with the УС-8 receiver is an airborne receiving-transmitting radio station, providing simplex telegraph-telephone two way air-to-air and air-to-ground communication.

Declassified in Part - Sanitized Copy Approved for Release 2011/12/14 : CIA-RDP80T00246A064200070001-1

Declassified in Part - Sanitized Copy Approved for Release 2011/12/14 : CIA-RDP80T00246A064200070001-1

The РСБ-5 transmitting radio station operates in the 2.15 to 20 mgc (short wave) band and in 350 to 500 kc (medium wave) band.

The receiving unit of the station is the УС-8 seventeen-tube superheterodyne receiver operating in the continuous 2.1 to 20 mgc band and one 230-500 kc medium wave band.

The number of wave-bands available for transmission is determined by the number of high-frequency units used in the transmitting set (No.1, No.2, and СВБ-5).

The radio station control panel allows a remote switching on of any of the three pretuned high-frequency units, which provides a possibility for in-flight selection of three wave-bands.

The РСБ-5 radio station transmitting unit is controlled directly by the radio operator.

The УС-8 receiver is remote controlled by the radio operator or by the pilot from two control panels.

Transmission and reception is accomplished through the micro-telephone circuit of the СПУ -7 intercom system. (The СПУ -7 system mode selector switch should be in the "ГР" position).

The РСБ-5 radio station and УС-8 receiver operate with an external fixed antenna 12.6 m long.

The radio station comprises (fig.29):

- high-frequency units Nos 1 and 2 (on a common base);
- СВБ-5 medium wave unit;
- control panel;
- power supply unit with РУК-300Б dynamotor;
- antenna unit with a quartz calibrator;
- fixed antenna unit;
- two outlying indicators;
- spare tube box.

Declassified in Part - Sanitized Copy Approved for Release 2011/12/14 : CIA-RDP80T00246A064200070001-1

Declassified in Part - Sanitized Copy Approved for Release 2011/12/14 : CIA-RDP80T00246A064200070001-1

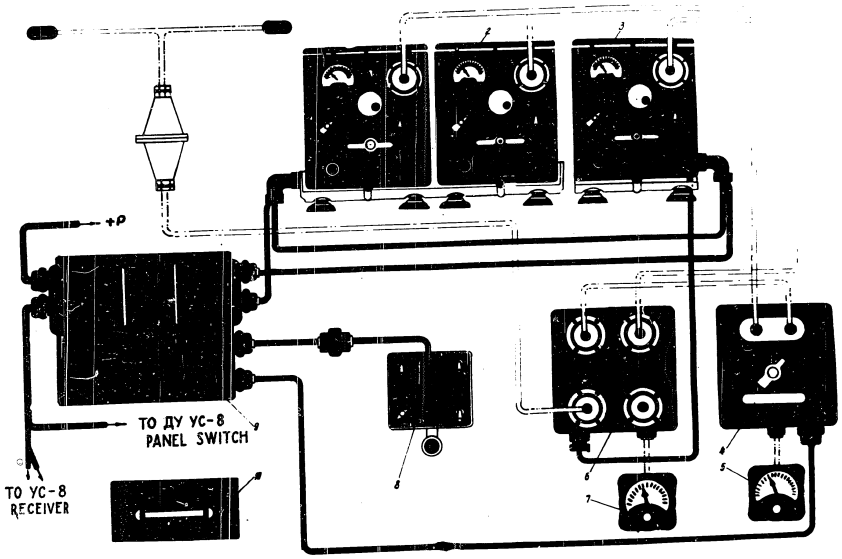

Fig. 29 РСБ -5 radio set components.

1-high frequency No.1 unit; 2-high frequency No.2 unit; 3-СВБ -5 medium wave unit; 4-antenna element with quartz calibrator; 5-outlying short wave indicator; 6-fixed antenna element; 7-outlying medium wave indicator; 8- РСБ -5 radio set control panel; 9-power supply unit with РУК-300Б dynamotor; 10-spare tube box.

Declassified in Part - Sanitized Copy Approved for Release 2011/12/14 : CIA-RDP80T00246A064200070001-1

Declassified in Part - Sanitized Copy Approved for Release 2011/12/14 : CIA-RDP80T00246A064200070001-1

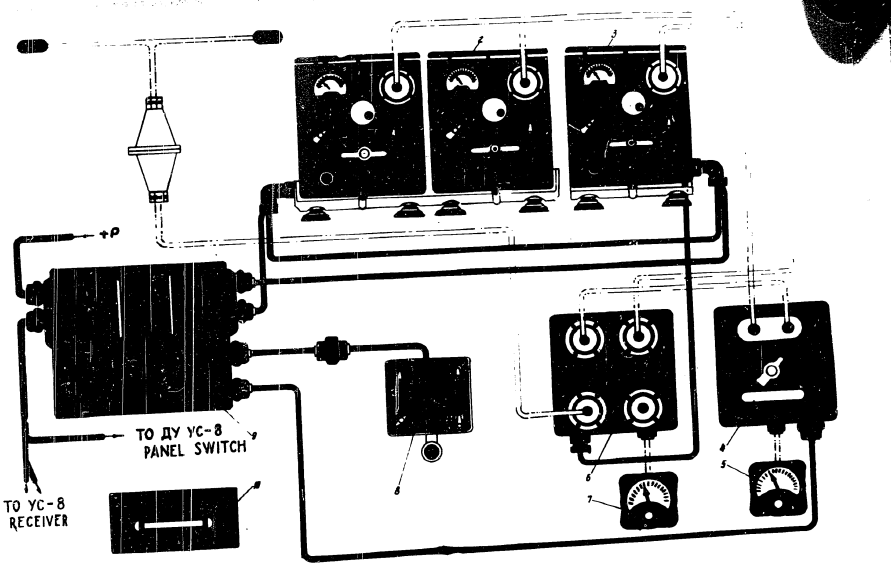

Fig. 29 РСБ -5 radio set components.

1-high frequency No.1 unit; 2-high frequency No.2 unit; 3-СВБ -5 medium wave unit; 4-antenna element with quartz calibrator; 5-outlying short wave indicator; 6-fixed antenna element; 7-outlying medium wave indicator; 8- РСБ -5 radio set control panel; 9-power supply unit with РУМ-300Б dynamotor; 10-spare tube box.

Declassified in Part - Sanitized Copy Approved for Release 2011/12/14 : CIA-RDP80T00246A064200070001-1

Declassified in Part - Sanitized Copy Approved for Release 2011/12/14 : CIA-RDP80T00246A064200070001-1

The УС-8 universal superheterodyne receiver set (fig. 30) comprises:

- УС-8 receiver;
- rectifier;
- two remote control panels;
- remote control panels switching [redacted];

To decrease radio interference АФУС-9 [redacted] filter is installed adjacent to the receiver/connected to the УС-8 receiver antenna feeder.

For convenience of checking the operation of all the РСБ-5 units, replacing tubes and fuses, and for retuning the transmitter, all units of the set are located near the radio operator's station (see fig. 32) as follows:

- high-frequency and СБВ-5 units and the antenna unit - on the radio operator' rack on Fr. No. 9, starboard;
- fixed antenna unit - on Fr. No. 9;
- power unit - under the radio operator's table, right of the 1-РСБ-70 radio set power unit;
- control panel - on the radio operator's table, at the right;
- outlying indicators - on the radio operator's instrument panel; the indicators are labeled "У.К. indicator К.В." ("УКВ индикатор КВ") and are supported on rubber shock-absorbers;
- УС-8 receiver and its power unit - on the right rack of Fr. No. 9;

[redacted]

- УС-8 receiver control panels - one at the copilot's station in the vicinity of Fr. Nos 6 and 7, the other on the radio operator's instrument panel;
- УС-8 receiver distribution box - on Fr. No. 9 to the right of and behind the radio operator's instrument panel.

Declassified in Part - Sanitized Copy Approved for Release 2011/12/14 : CIA-RDP80T00246A064200070001-1

Declassified in Part - Sanitized Copy Approved for Release 2011/12/14 : CIA-RDP80T00246A064200070001-1

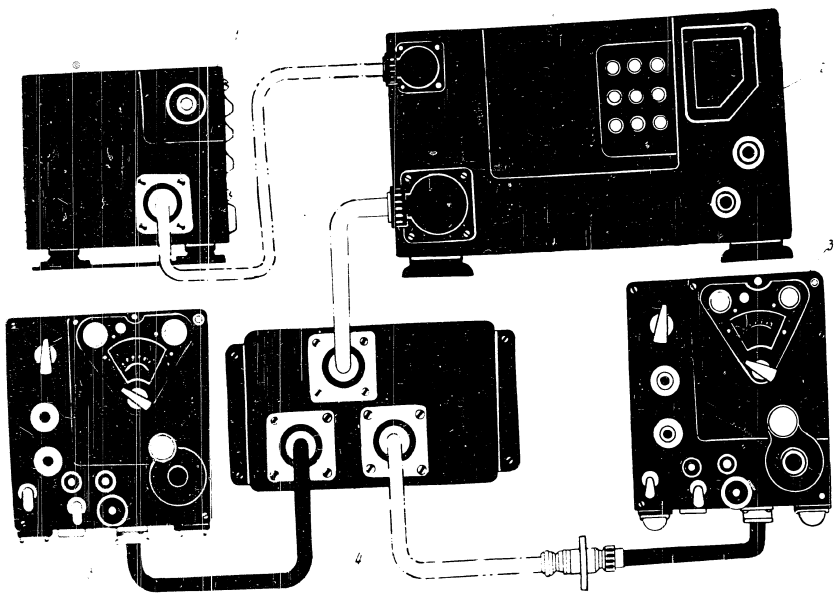

Fig. 30 УС-8 receiver components.

1-rectifier; 2-УЛ-8 receiver; 3-remote control panel; 4-remote control panels switching box.

Declassified in Part - Sanitized Copy Approved for Release 2011/12/14 : CIA-RDP80T00246A064200070001-1

Declassified in Part - Sanitized Copy Approved for Release 2011/12/14 : CIA-RDP80T00246A064200070001-1

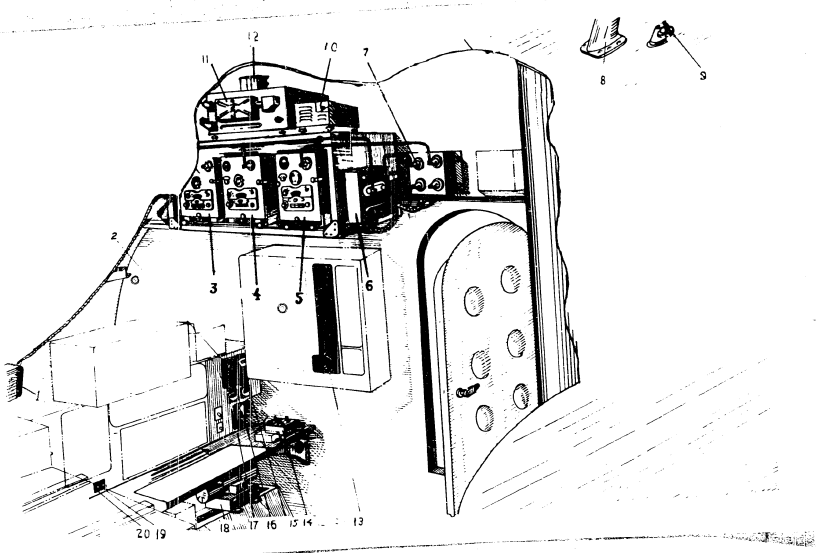

Fig. 31. РСБ-5 Radio Set and УС-8 Receiver Locations

1-УС-8 receiver control panel(co-pilot's); 2-УС-8 receiver control panel(radio operator's); 3-РСБ-5 radio set highf frequency unit No.1; 4-РСБ-5 radio set high frequency unit No.2; 5-СВБ-5 medium wave unit; 6-antenna element with quartz calibrator; 7-fixed antenna element; 8-antenna bay; 9-partition insulator; 10-УС-8 receiver rectifier; 11-УС-8 receiver; 12-АФУС-9 filter; 13-radio operator's С.В. board; 14-РСБ-5 radio set control panel; 15-medium wave indicator; 16-УС-8 receiver control panels switching box; 17- short wave indicator; 18-power supply unit with РУК-3005 dynamotor; 19- РСБ-5 radio set С.В.; 20-УС-8 receiver С.В.

Declassified in Part - Sanitized Copy Approved for Release 2011/12/14 : CIA-RDP80T00246A064200070001-1

Declassified in Part - Sanitized Copy Approved for Release 2011/12/14 : CIA-RDP80T00246A064200070001-1

The radio set cables are fastened with rubber-padded clamps provided with bending strips.

The PCB-5 antenna lead-in from the fair-lead is mounted on a porcelain insulator. The PCB-5 radio set°antenna circuits are made of PK-6 cable with the external shielding stripped.

The VC-8 receiver antenna lead-in is made of PK-50 cable

The PCB-5 radio station operates with an external fixed antenna in the form of beam of bronze wire suspended between the port mast and the aircraft fin. Effective length of the PCB-5 antenna is 12.6 m. To keep the antenna strained there is a tension spring in the antennastrut which exerts a 70-80 kg pulling force.

The front and rear insulators of the antenna are protected from icing with cone aluminium caps. The PCB-5 antenna downlead is connected to a partition insulator installed between Fr.Nos. 8 and 9.

On the outside the insulator is protected with a plexiglass shield. A polyethilene insert is installed in the insulator to prevent disruption.

Notes on Operation

1. The PCB-5 radio station and the VC-8 receiver are connected to the aircraft + 27 v d.c. power distribution system through the A30-2 C.B. located on the radio operator's panel (to the left, at bottom). The PCB-5 C.B. closed, power will be supplied to the KM-50 contactor which in turn applies 27v d.c. to the PCB-5 power unit. AM-30 inertial fuse is installed in the power circuit of the PCB-5 power unit. The fuse is located in radio operator's " PK панель " distribution box.

The VC-8 receiver is supplied with 115 V 400cps a.c. from the "PK 115 v" primary bus. ACM-2 fuse is installed in the protection circuit.

Declassified in Part - Sanitized Copy Approved for Release 2011/12/14 : CIA-RDP80T00246A064200070001-1

Declassified in Part - Sanitized Copy Approved for Release 2011/12/14 : CIA-RDP80T00246A064200070001-1

2. Prior to switching on the РСБ-5 radio set, the switches on the control box should be placed in "ПРМ" and "ТЛФ" positions.

3. Tuning of the transmitter units is performed on the ground, according to the manufacturer's instruction. The units may be retuned and frequency trimmed in flight.

4. Waves selection at the control panel must be performed with the switches in the "ПРМ" position only, to avoid burning out the fuse or burning the contacts of the antenna and the high-frequency unit relays.

5. In high altitude flight power output of the following units should be decreased to 25%:

- hf units of the short wave band - at altitudes above 10000 m;
- СВБ-5 unit of the medium wave band - at altitudes above 5000 m (as indicated by the cabin pressure).

6. To prevent radio interference during operation it is necessary to check the bonding condition of all units, and particularly that of the transmitter, and condition of the dynamotor commutators.

7. Condition of the external surfaces of the antenna insulators and that of the partition insulator should be regularly checked. Insulators with dark spots or traces of disruption on their surfaces should be replaced.

12. РСИУ-4П UHF command Radio Set

The РСИУ-4П radio set is an UHF transmitting-receiving radiotelephone station, designed for command translation between the aircraft and between the aircraft and the ground.

The РСИУ-4П radio set installed in the aircraft has two transmitter-receivers operating in the 100 to 150 mgc (2-3 m) frequency band, each with six preset communication channels.

Declassified in Part - Sanitized Copy Approved for Release 2011/12/14 : CIA-RDP80T00246A064200070001-1

Declassified in Part - Sanitized Copy Approved for Release 2011/12/14 : CIA-RDP80T00246A064200070001-1

The РСИУ-4П radio set may be connected to the microtelephone circuits of the СПУ-7 intercom.

The РСИУ-4П No. 1 radio set operates in СПУ-7 system circuit when the subset selector knob is in the "УКР" position, while the РСИУ-4П No. 2 radio set operates with the subset knob in the "ДР" position. This allows the pilot and co-pilot to operate the transmitter receivers independently for one-way communication in two separate channels ("УКР" and "ДР").

To provide two-way communication or to allow the pilot to operate on two guard channel frequencies, both receiver output may be connected in series and connected to both the main operating channel ("УКР") and the auxiliary channel ("ДР"). For this purpose a receiver selector switch is installed on the pilot's roof panel between the radio control panels.

Provisions are made in the radio set for self-listening on low frequency, for which purpose a low frequency amplifier is used.

The are РСИУ-4П radio set includes;

- "И" tuning meter unit;
- two transmitter-receivers;
- two power units;
- two control panels;
- К-2 additional box for control panels;
- АМС rod antennas;
- connecting bunches and cables.

Declassified in Part - Sanitized Copy Approved for Release 2011/12/14 : CIA-RDP80T00246A064200070001-1

Declassified in Part - Sanitized Copy Approved for Release 2011/12/14 : CIA-RDP80T00246A064200070001-1

The AMC antenna is a single-piece metal dipole made of AK-6 alluminium alloy. It is designed for operation in the UHF band. The dipole has a streamlined solid cross-section. The dipole root is secured in a powder-pressed insulator-flange. The A-1 antenna filter is installed on the antenna root and connected to it by contacts. The РСИУ-4П radio set is connected to the ФФ-1 filter plug-connector with antenna cable.

The РСИУ-4П radio set units are located as follows(fig.32):

-transmitter-receivers and radio set power units - on a rack made of sections jointed by rivets, mounted on the wall of Fr.No.9 (port);

- control panels and additional box - on the remote controls panel, installed on the crew cabin canopy framework at the pilot's station so that it is within easy reach;

-AMC rod antennas - on the port and starboard fuselage sides between Fr. Nos 8 and 9; the starboard antenna is for РСИУ-4П No.1 radio set and the port - for РСИУ-4П No.2 radio set; the antennas are connected with the transmitter-receivers through high frequency feeders.

The radio set cables run along the port side of the pilots' cabin. Cables and feeders are attached to the air-frame with rubber-padded clamps provided with bonding strips.

Installation and removal of the РСИУ-4П units does not present any difficulty.

Notes on Operation

Putting the radio set into operation:

1. The РСИУ-4П Nos 1 and 2 sets automatic C.B. on radio operator's C.B. panel should be closed, which makes the radio set ready for operation.

Declassified in Part - Sanitized Copy Approved for Release 2011/12/14 : CIA-RDP80T00246A064200070001-1

Declassified in Part - Sanitized Copy Approved for Release 2011/12/14 : CIA-RDP80T00246A064200070001-1

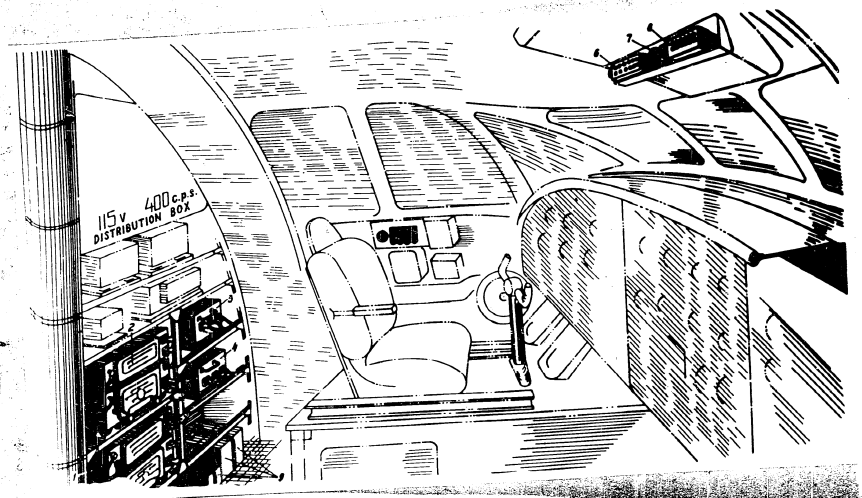

Fig. 32 РСИУ-4П radio set location.

1-РСИУ-4П No.2 receiver-transmitter; 2-РСИУ-4П No.1 receiver-transmitter; 3- РСИУ-4П No.1 power supply units; 4-РСИУ-4П No.2 power supply units; [redacted] 6-РСИУ-4П No.1 control panel; 7-К-2 additional box for receivers switching; 8-РСИУ-4П No.2 control panel; 9-1-РСБ-70, РСБ-5 and РТИСspare parts kit.

Declassified in Part - Sanitized Copy Approved for Release 2011/12/14 : CIA-RDP80T00246A064200070001-1

Declassified in Part - Sanitized Copy Approved for Release 2011/12/14 : CIA-RDP80T00246A064200070001-1

2. The СП-5 fuses in 115 v 400 cps power circuit are installed in "РК 115 v" distribution box on the wall of Fr. No.9 (to the left).

3. The radio set is put into operation by pressing any of the communication channel knobs on the control panel. It will be remembered, that the knob should be pressed to the stop to prevent failure of the channel switching mechanism.

4. Self-listening is performed through the high frequency channel for which purpose the audio frequency is picked off a special transmitter detector, connected to the receiver low frequency unit and is listened to through the crew members' headsets.

5. The radio set will be ready for operation only within 1 - 1.5 min after being switched on. Time of switching over from one wave band to another does not exceed 3 sec; time of switching over from reception to transmission is 0.5 sec.

6. The receiver operation duty is continuous, the transmitter permits continuous operation for not more than 15 minutes.

Recommended sequence of operation: two minute transmission, followed by two minute reception, etc.

13. СП-50 "Материк" Instrument Landing System

The instrument landing system comprises a set of radio instruments which provides for aircraft landing under conditions of poor visibility.

The СП-50 equipment set consists of:

- КРП-Ф localizer receiver;
- ГРП-2 glide slope receiver;
- КРП-Ф localizer receiver antenna;
- localizer and glide slope receivers control panel;
- ПСП-48 instrument landing system indicators;

Declassified in Part - Sanitized Copy Approved for Release 2011/12/14 : CIA-RDP80T00246A064200070001-1

Declassified in Part - Sanitized Copy Approved for Release 2011/12/14 : CIA-RDP80T00246A064200070001-1

- МРП-56П marker beacon receiver;
- marker beacon receiver antenna (in fuselage);
- marker beacon receiver bell;
- СД-1М range finder;
- range finder antenna;
- range finder control panel;
- ПРД-5С range finder indicator;
- АП-1 amplitude adapter;
- capacitor unit.

The КРП-2, КРП-2, МРП-56П and СД-1М Units Power Supply

The localizer and glide slope receivers are supplied with + 27 v d.c. through the "Материк" system distribution box from АЗС-10 "Материк" C.B. on the radio operator's C.B. panel.

The МРП-56П marker receiver is supplied with + 27 v d.c. from АЗС-2 C.B. on the radio operator's C.B. panel. The МРП-56П marker receiver is supplied with 220 v d.c. from the АРК-5 Nos 1 and 2 A.D.F. In case both АРК-5 operate simultaneously power is fed from the АРК-5 No.1 A.D.F. The СД-1М range finder operates on 27 v d.c. and 115 v 400 cps a.c. through the ТКБ52ПД [redacted] relay.

When the АЗС-2 C.B. on the radio operator's C.B. panel, labeled "СД-1") is closed, + 27 v d.c. voltage is applied to the relay winding, the relay close and the 27 v d.c. is then supplied to the СД-1М receiver. At the same time the relay will connect "РК 115 v" 115 v 400 cps a.c. secondary bus, through the СП-5 fuse, to the [redacted] transmitter.

The ILS equipment is located as follows (see fig. 33):

- СД-1М range finder receiver and transmitter - in the neutral gas bottles bay under the cargo floor, adjacent to Fr. Nos 24 and 25;

Declassified in Part - Sanitized Copy Approved for Release 2011/12/14 : CIA-RDP80T00246A064200070001-1

Declassified in Part - Sanitized Copy Approved for Release 2011/12/14 : CIA-RDP80T00246A064200070001-1

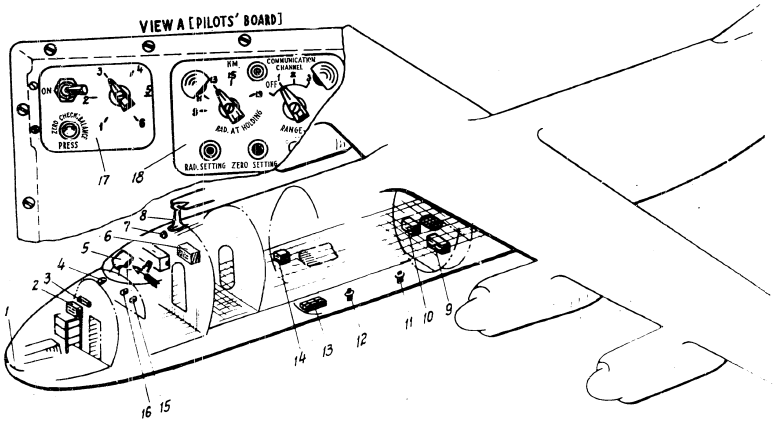

Fig. 33 ILS equipment locations.

1-glide slope receiver antenna; 2-ПРП-2 glide slope receiver; 3-"Материк" system distribution box; 4-ПКП-48 indicator (co-pilot's); 5-remote control panel at the cabin canopy; 6-КРП-Ф localizer receiver; 7-МРП-56П marker receiver bell; 8-localizer antenna; 9-СД-1М range finder transmitter; 10-СД-1М range finder receiver; 11-СД-1М range finder receiving antenna; 12-СД-1М range finder transmitting antenna; 13-МРП-56П marker receiver antenna; 14-МРП-56П receiver; 15-ПРД-50 range indicator; 16-ПКП-48 indicator (pilot's); 17-"Материк" system control panel; 18-СД-1М range finder control panel.

Declassified in Part - Sanitized Copy Approved for Release 2011/12/14 : CIA-RDP80T00246A064200070001-1

Declassified in Part - Sanitized Copy Approved for Release 2011/12/14 : CIA-RDP80T00246A064200070001-1

- МРП-56П marker receiver - in the cargo cabin in the vicinity of fr. Nos 15 and 15 (starboard);

КРП-Ф localizer receiver - in pilots' cabin on the [redacted] rack (in the upper part) attached to fr. No. 9;

- ГРП-2 glide slope receiver - in the navigator's cabin on the РПБ -3 units rack adjacent to fr. No. 4 (in the upper part);

- ПСП-48 indicators and the МРП-56П marker beacon receiver signal lights - on the left and right pilots's instrument panels;

-range finder indicator - on the left pilots' instrument panel;

- glide slope and localizer receivers control panels and the radio rage finder control panel - on the pilots' remote controle panel;

- КРП-Ф localizer receiver antenna - along the aircraft C.L. on the upper surface of the fuselage adjacent to fr. Nos 8 and 9;

- ГРП-2 glide slope receiver antenna - on the inside surface of the navigator's front glass panel;

- МРП-56П marker beacon receiver antenna - flush - mounted in the fuselage skin in the vicinity of fr. Nos 15 and 16 along the aircraft C.L.;

- radio range finder receiving and transmitting antennas - along the aircraft C.L. on the lower fuselage surface; receiving antenna - at fr. No.20, transmitting antenna - at fr. No. 23;

МРП-56П marker beacon receiver bell - on the upper part of fr. No.9 behind the copilot's seatback;

- glide slope and localizer receivers splitter box - in the navigator's cabin on the upper part of fr. No. 4 (starboard).

Putting ИРС into operation

To put the glide slope and localizer receivers into operation it is necessary

- to close the АЗФ-16 С.В. labeled " Материк " on the radio

Declassified in Part - Sanitized Copy Approved for Release 2011/12/14 : CIA-RDP80T00246A064200070001-1

Declassified in Part - Sanitized Copy Approved for Release 2011/12/14 : CIA-RDP80T00246A064200070001-1

operator's C.B. panel;

- to place the switch on the glide slope and localizer receivers remote control panel in the "IN" position.

This procedure over and tubes warmed up, the equipment will be ready for operation.

To put the СД-1М range finder receiver and transmitter into operation it is necessay

- to close the A3C-2 C.B. labeled "СД-1М" on the radio operator's C.B. panel;

- to switch on the receiver and transmitter power supply (on the remote control panel).

After the tubes have warmed-up the radio range finder will be ready for operation.

The МРП-56П marker beacon receiver is not provided with a separate power unit. For supplying power to the tubes, anodes and filaments the receiver is connected to the АРК-5 A.D.F. Nos 1 and 2 circuit through relay contacts.

To put the marker beacon receiver into operation, it is necessary

- to close the C.B. labeled "АРК-5 No.1" (or No.2) and that labeled "МРП-56П" on the radio operator's C.B. panel;

- to switch on the АРК-5 Nos 1 and 2 A.D.F. on the navigator's or pilots' A.D.F. control panels.

The tubes warmed-up, the МРП-56П receiver will be ready for operation.

14. Aircraft Interphone System

The СПУ -7 aircraft interphone system is designed to provide intercommunication for eight crew members through either of the two circuits (circuit No.1 and circuit No. 2) and external radio communication for five crew members through four aircraft radio stations and two automatic direction finders.

Declassified in Part - Sanitized Copy Approved for Release 2011/12/14 : CIA-RDP80T00246A064200070001-1

Declassified in Part - Sanitized Copy Approved for Release 2011/12/14 : CIA-RDP80T00246A064200070001-1

The aircraft interphone system comprises:

a) two amplifiers;

b) eight subsets;

c) five connection boxes;

d) seventeen РАМ four-contact keys.

The СПУ -7 interphone system is switched on by closing circuit breakers labeled "СПУ -7" on the radio operator's C.B. panel.

When the C.B. is closed, 28 v d.c. power is supplied to the interphone system and it is ready for operation. The "circuit 1-2" ("Сеть-2") switch should be in the "Circuit -1" ("Сеть 1") position.

There is an "ICS" labeled four-pin plug connector on the [redacted] forward emergency escape door, to which a special cord is connected to provide ground crew - flight crew communication. The cord is included in the spare parts kit. The operating procedure is the same as during inter-crew communication.

Specific feature of the СПУ-7 Interphone System as Installed in the Aircraft

In case of failure of one interphone amplifier intercommunication can be accomplished by the use of the other amplifier. Transfer to the stand-by interphone system is accomplished by the crew members through switching the "Circuit 1 - Circuit 2" ("Сеть 1 - Сеть 2 ") tumbler switch on the subsets.

On the operator's instrument panel there is a push-button labeled "СПУ failure" ("СПУ вышло из строя "). When this push-button is pressed a signal lamp labeled "СПУ failure" illuminates on the radio operator's instrument panel.

When the "Сирена-2 " tail cone protection system detects a target, a warning signal is sent into all headsets irrespective of their mode of operation.

Declassified in Part - Sanitized Copy Approved for Release 2011/12/14 : CIA-RDP80T00246A064200070001-1

Declassified in Part - Sanitized Copy Approved for Release 2011/12/14 : CIA-RDP80T00246A064200070001-1

With the mode selector switch in the "СР" position, the gunner can receive in the headset the tone signal of target acquisition by the "Гамма-24Г" system.

For location of the СПУ-7 system units refer to fig. 34.

The interphone amplifiers are installed near the radio operator's station to the right of the 1-РСБ-70 transmitter and are fastened to the rack with screws and nuts.

Subsets are installed at all crew member stations. All sets are identical in electric circuit and construction, and interchangeable.

The "I.C.S." and "Radio" push-buttons are installed as follows:

- the "Radio" push-button - at the navigator's station on the instrument panel and the "I.C.S." button on the floor (foot operated). There is also an outlying "I.C.S." button in front of the navigator's instrument panel, and "I.C.S." button on the НКПБ-7 bomb sight;

- the "I.C.S." and "Radio" buttons at the pilots' stations are mounted in the control-wheels, and "I.C.S." button on the СП-1 sextant.

- the "I.C.S." button at the radio operator's station is installed on the table, and the "Radio" button is on the floor;

- "I.C.S." button at the flight engineer's station is on the foot-rest of the seat;

- the attendants' "I.C.S." button is installed on Fr. No. 9;

- the medical attendant's "I.C.S." button is installed on Fr. No. 30;

- two "I.C.S." buttons are installed at the gunner's station: one on the gun-sight, and the other on Fr. No. 65, and "Radio" pedal-switch on the cabin floor at the right.

Splitter-boxes are located as follows:

- two on the port side of the navigator's station between Fr. Nos 3 and 4;

- two on the starboard side of the crew cabin between Fr. Nos 8 and 9;

- one on the ceiling of the cargo compartment at Fr. No. 31;

Declassified in Part - Sanitized Copy Approved for Release 2011/12/14 : CIA-RDP80T00246A064200070001-1

Fig.34. СПУ-7 interphone system components location.

1-"RADIO" button (co-pilot's); 2-"I.C.S." button (co-pilot's); 3- interphone subset (co-pilot's); 4-"RADIO" button (first pilot's); 5-"I.C.S." button (first pilot's); 6- СПУ-7 С.Б. 7- junction boxes; 8- amplifiers; 9-"I.C.S." button (attendants) 10- interphone subset(attendant's); 11- interphone junction box; 12-"I.C.S." button (on the gun-sight); 13-"I.C.S." button (gunner's); 14- interphone subset(gunner's); 15- interphone subset (medical attendant's); 16-"I.C.S." button (medical attendant's); 17- ground interphone cord connection socket; 18- interphone subset (first pilot's); 19- interphone subset (radio operator's); 20- interphone failure signal lamp (radio operator's); 21- foot-operated "I.C.S." button(radio operator's); 22-"RADIO" button (radio operator's); 23-"I.C.S." button (flight engineer's); 24-interphone subset (flight engineer's); 25- interphone junction boxes; 26-"RADIO" button (navigator's); 27- interphone subset (navigator's); 28-"I.C.S." button (navigator's); 29- foot-operated "I.C.S." button (navigator's)

Declassified in Part - Sanitized Copy Approved for Release 2011/12/14 - CIA-RDP80T00246A064200070001-1

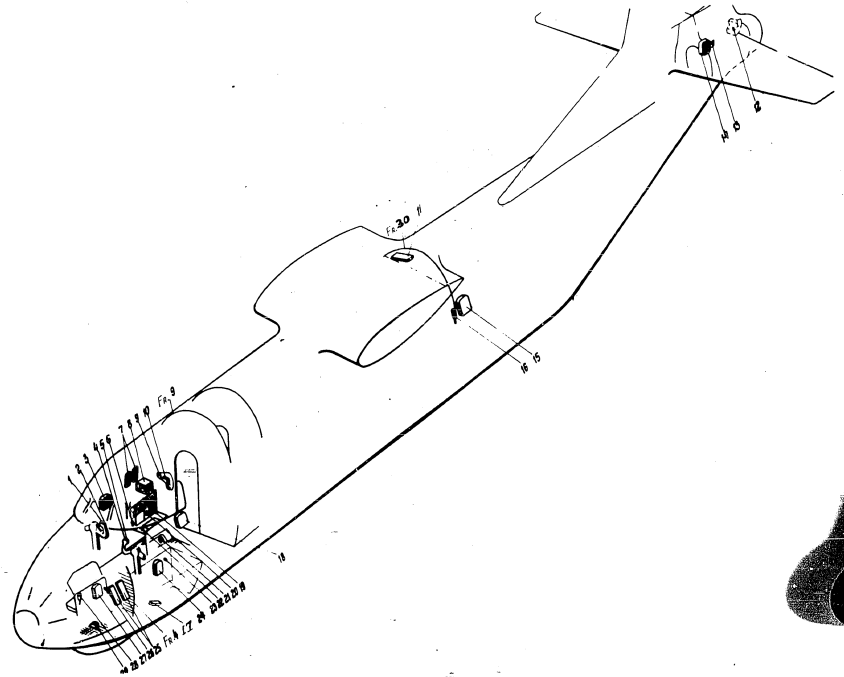

1-"RADIO" bu
4-"RADIO" b
7- junctio
dant's);
ton (gunn
16-"I.C.S."
16- interp
20- inter-
phone failure
adio opera-
tor's); 22-"RADIO" button (radio operator's); 23-"I.C.S." button (flight engineer's); 24-interphone subset (flight engineer's); 25- interphone junction boxes; 26-"RADIO" button (navigator's); 27- interphone subset (navigator's); 28-"I.C.S." button (navigator's); 29- foot-operated "I.C.S." button (navigator's)

Declassified in Part - Sanitized Copy Approved for Release 2011/12/14 : CIA-RDP80T00246A064200070001-1
Declassified in Part - Sanitized Copy Approved for Release 2011/12/14 : CIA-RDP80T00246A064200070001-1

Declassified in Part - Sanitized Copy Approved for Release 2011/12/14 : CIA-RDP80T00246A064200070001-1

Notes on Operation

1. Splines on the axles of the gain control knobs of the СПУ -7 amplifiers should be aligned with the marks on the amplifier chassis. Gain control knobs are designed to amplify the power level when the number of subsets increases. Using them for volume control is not recommended.

2. Before flight, the crew members must check serviceability of the interphone system by means of intercommunication.

3. It should be remembered that faulty bonding and shielding of the wiring may lead to heavy interference.

4. Headsets with laryngophones should be kept in a dry place and protected from impacts against hard objects, as moisture impairs laryngophone operation and impacts cause demagnetization of telephone permanent magnets.

15. АРК-5 Automatic Direction Finder

The АРК-5 automatic direction finder is a radio navigational instrument designed to guide an aircraft when used in conjunction with homing and broadcasting stations and radio beacons, and to determine the aircraft position.

Two automatic direction finders are installed in the aircraft - АРК-5 No.1 and АРК-5 No.2. The АРК-5 No.1 (A.D.F.) is provided with two control boxes, and the АРК-5 No.2 (A.D.F.) - with one control box.

The АРК-5 No.1 A.D.F. consists of:

- receiver;
- loop antenna in the fuselage;
- folded dipole;

two control boxes;

- two СУП -7 bearing indicators;
- УШДБ -2 navigator's bearing indicator;

Declassified in Part - Sanitized Copy Approved for Release 2011/12/14 : CIA-RDP80T00246A064200070001-1

Declassified in Part - Sanitized Copy Approved for Release 2011/12/14 : CIA-RDP80T00246A064200070001-1

- relay-distributing box;
- power transformer;
- dehydrator.

The [illegible]-5 No.2 A.D.F. comprises:

- receiver;
- loop antenna in the fuselage;
- rod antenna;
- control box;
- two СУП -7 bearing indicators;
- power transformer;
- dehydrator.

The [illegible] dipole serves as a non-directional antenna for the No.1 A.D.F.

The rod antenna serves as a non-directional antenna for A.D.F. No.2. The effective height of this antenna is 0.5 m.

The relay distributing box comprises two РП-6 relays and one ТКЕ-[illegible] relay which serve to connect either of the control boxes to the receiver.

The A.D.F. units are located as follows.

The receiver of the No.1 A.D.F. is installed on the ceiling of the cabin between Fr. Nos 10 and 11 along the aircraft centre line.

The receiver of the No.2 A.D.F. is installed on the ceiling of the cabin between Fr. Nos 10 and 20 along the aircraft centre line.

The loop antennas of both A.D.F.'s with dehydrators are suspended along the aircraft [illegible] under the ceiling of the cabin; A.D.F. No.1 loop - between Fr. Nos 11 and 12; A.D.F. No.2 loop - between Fr. Nos 19 and 20. Each loop antenna is placed in a metal fairing which is attached to the fuselage skin under a special cut and is hermetically covered [illegible].

Declassified in Part - Sanitized Copy Approved for Release 2011/12/14 : CIA-RDP80T00246A064200070001-1

Declassified in Part - Sanitized Copy Approved for Release 2011/12/14 : CIA-RDP80T00246A064200070001-1

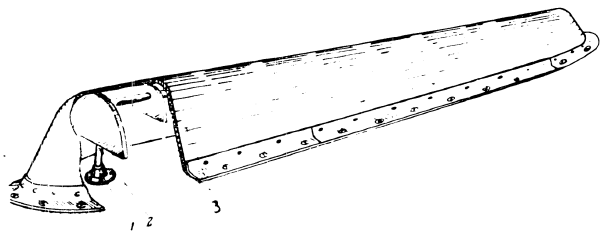

Fig. 35 ARK-5 No.1 [illegible] folded dipole antenna.

1-air-tight bushing; 2-antenna [redacted]
3-housing.

Declassified in Part - Sanitized Copy Approved for Release 2011/12/14 : CIA-RDP80T00246A064200070001-1

Declassified in Part - Sanitized Copy Approved for Release 2011/12/14 : CIA-RDP80T00246A064200070001-1

The folded dipole antenna of the АРК-5 No.1 A.D.F. is installed externally on the fuselage to the right of the aircraft centre line between Fr. Nos 11 and 19; the antenna lead is near the АРК-5 receiver between Fr. Nos 11 and 12.

The non-directional antenna of the АРК-5 No.2 A.D.F. is installed near the corresponding receiver between Fr. Nos 20 and 21.

One of the two АРК-5 No.1 control boxes is located on the pilots' remote control panel on the canopy, and the other - on the navigator's instrument panel.

The АРК-5 No.2 control box is installed on the navigator's instrument panel by the АРК-5 No.1 control box.

Bearing indicators model СУП -7 of both A.D.F.'s are installed in the pilots' instrument panels.

The УШДБ-2 bearing indicator is installed on the navigator's instrument panel.

The power transformers are installed on the port side at the navigator's station between Fr. Nos 3 and 4.

The relay-distributing box is located at the navigator's station on Fr. No.4.

Notes on Operation

The АРК-5 No.1 A.D.F. is supplied with 28 v d.c. power through the АЗС-5 circuit breaker, and the АРК-5 No. 2 A.D.F. - through the АЗС-2 circuit breaker. Both circuit breakers are located on the radio operator's C.B. panel.

The АРК-5 No.1 A.D.F. is supplied with 115 v 400 cps a.c. from the "РК 115 v" primary bus through СП-2 fuse. The АРК-5 No.1 A.D.F. is supplied from the secondary bus, also through СП-2 fuse.

The two АРК-5 A.D.F's may be tuned to different stations and can operate simultaneously.

Declassified in Part - Sanitized Copy Approved for Release 2011/12/14 : CIA-RDP80T00246A064200070001-1

Declassified in Part - Sanitized Copy Approved for Release 2011/12/14 : CIA-RDP80T00246A064200070001-1

The АРК-5 No.1 A.D.F. may be controlled by both pilots and the navigator from their stations.

The АРК-5 No.2 A.D.F. may be controlled by the navigator only.

Switching on and tuning of the A.D.F. should be performed as follows.

Close the A.D.F. circuit breakers on the radio operator's C.B. panel.

Switch on the A.D.F. power supply by turning the mode selector switch on the АРК-5 control box in the "АРК" position. This will cause the green signal lamp to come on indicating that the A.D.F. is switched on. When the A.D.F. with dual control installations is controlled through the second control box, the green signal lamp is now illuminated. In this case control may be switched over to any of the control boxes by pressing the button labeled "Control" ("Управление").

Turn the volume control knob clockwise until it stops.

Put the "ТЛФ — ТЛГ" switch in the "ТЛФ" position when the signal transmitting station is modulated and in the "ТЛГ" position when it is unmodulated.

Set up the required subband.

By turning the "Tuning" ("Настройка") knob, set up on the dial the frequency of the homing station.

Accomplish fine tuning of the receiver aiming at maximum clockwise deflection of the tuning indicator pointer.

Having tuned the receiver, listen to the call signals to make sure that the A.D.F. is tuned to the correct station.

NOTE: The ОУП-7 bearing indicator of the pilot's A.D.F. No.2 may be transfered by the navigator from operation in the АРК-5 system to operation in the ДАК-ДБ-5 remote controlled astrocompass system.

Declassified in Part - Sanitized Copy Approved for Release 2011/12/14 : CIA-RDP80T00246A064200070001-1

Declassified in Part - Sanitized Copy Approved for Release 2011/12/14 : CIA-RDP80T00246A064200070001-1

Electric Remote Control of the APK-5 A.D.F.

The "Oka" electric remote control unit is designed for remote tuning of the APK-5 receivers from the control boxes of the APK-5 Nos 1 and 2 A.D.F.'s.

1. Range of the angle transmission is up to 40 m.

2. Angle transmission error does not exceed ± 2.5°.

3. Returning time of the APK-5 receiver from one extreme position to the other does not exceed 35 sec.

4. The remote control unit and the APK-5 A.D.F. are supplied from the same power sources.

Current drain at nominal 27 v d.c. does not exceed 0.15 a.

Current drain at nominal 115 v a.c. does not exceed 0.55 a.

The remote control unit comprises:

- three transmitters (two for the navigator and one for the pilots);
- two amplifiers;
- two actuators.

For location of the remote control unit components refer to Fig. 36.

The transmitters are located near the APK-5 control boxes, two of them are behind the navigator's instrument panel and one is inside the remote control box on the canopy of the pilots' cabin.

Remote control amplifiers are installed under the pilot's left bridge in the vicinity of Fr. Nos 6 and 7.

Actuators are located near the APK-5 receivers.

Notes on Operation

The electric control unit requires no adjustment in service.

The electric remote control unit is switched on simultaneously with the APK-5 A.D.F., a.c. and d.c. voltage being supplied from the

Declassified in Part - Sanitized Copy Approved for Release 2011/12/14 : CIA-RDP80T00246A064200070001-1

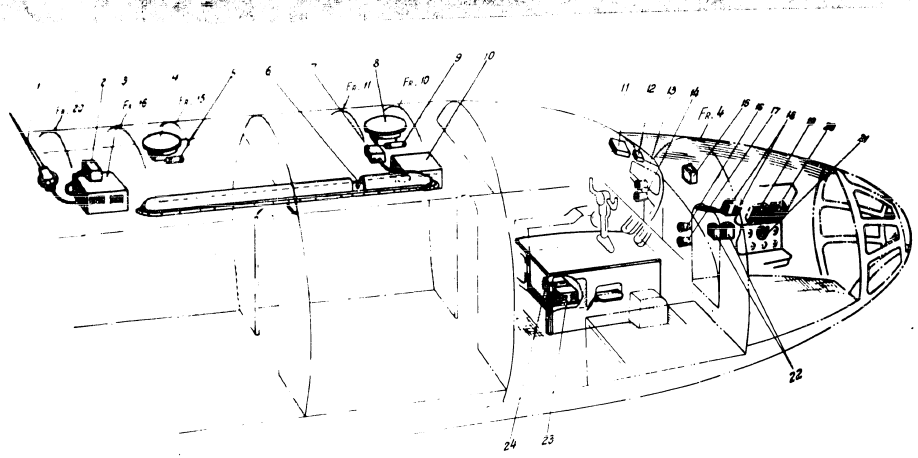

Fig. 35 APK-5 A.D.F. and remote control units.

1-APK-5 No.2 rod antenna; 2-APK-5 No.2 remote control actuator; 3-APK-5 No.2 receiver; 4-APK-5 No.2 loop antenna; 5-dehydrator; 6- APK-5 No.1 folded dipole antenna; 7-APK-5 No.1 remote control actuator; 8- APK-5 No.1 loop antenna; 9-dehydrator; 10-APK-5 No.1 receiver; 11-APK-5 No.1 control box; 12-APK-5 No.1 remote control transmitter (pilot's); 13-APK-5 No.1 bearing indicator model СУП-7 (pilot's); 14-APK-5 No.2 bearing indicator model СУП-7 (pilot's); 15-relay distributing box; 16-APK-5 No.1 bearing indicator model СУП-7 (co-pilot's); 17-APK-5 No.2 bearing indicator model СУП-7 (co-pilot's); 18-APK-5 Nos 1 and 2 remote control transmitter (navigator's); 19-APK-5 No.1 control box (navigator's); 20-APK-5 No.2 control box (navigator's); 21- УШБ-2 bearing indicator (navigator's); 22-APK-5 Nos 1 and 2 power transformers; 23-APK-5 remote control amplifier; 24-APK-5 No.1 remote control amplifier.

Declassified in Part - Sanitized Copy Approved for Release 2011/12/14 : CIA-RDP80T00246A064200070001-1

Declassified in Part - Sanitized Copy Approved for Release 2011/12/14 : CIA-RDP80T00246A064200070001-1

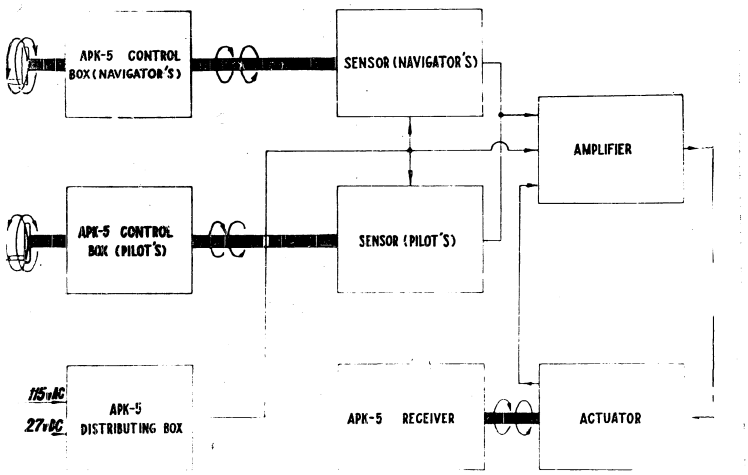

Fig. 37 The APK-5 electric remote control unit schematic diagram.

Declassified in Part - Sanitized Copy Approved for Release 2011/12/14 : CIA-RDP80T00246A064200070001-1

Declassified in Part - Sanitized Copy Approved for Release 2011/12/14 : CIA-RDP80T00246A064200070001-1

APK-5 distribution box.

16. PB-2 Low Altitude Radio Altimeter

The PB-2 radio altimeter is designed to obtain indications of true flight altitude above the terrain in the range of 0 to 1200 m.

The instrument is supplied with 28 v d.c. through the ЗЗР-6 circuit breaker on the radio operator's C.B. panel. The radio altimeter may be used by both pilots. The copilot can switch on his PB-2 indicator when the first pilot's indicator is off.

The PB-2 radio altimeter equipment comprises:

- transmitter-receiver;
- РУ-11АК dynamotor;
- two ПРВ-46 altitude indicators;
- transmitting and receiving antennas;
- RF cables.

The RB-2 units are located in the aircraft as follows.

The transmitter-receivers and the dynamotor are located in the aft fuselage section, on the starboard side between Fr. Nos 60 and 62.

The АРВ-46 altitude indicators are located on the left and right pilots' instrument panels.

The transmitting and receiving antennas are installed on the lower surface of the tail-plane; the transmitting antenna is on the right, and the receiving antenna on the left stabiliser.

The RF cables passing through the stabiliser are enclosed in aluminium tubes. In other places all wires and cables are fastened to the frame by means of clamps with rubber padding.

The dynamotor plug connection socket is installed on Fr. No.61.

Declassified in Part - Sanitized Copy Approved for Release 2011/12/14 : CIA-RDP80T00246A064200070001-1

Declassified in Part - Sanitized Copy Approved for Release 2011/12/14 : CIA-RDP80T00246A064200070001-1

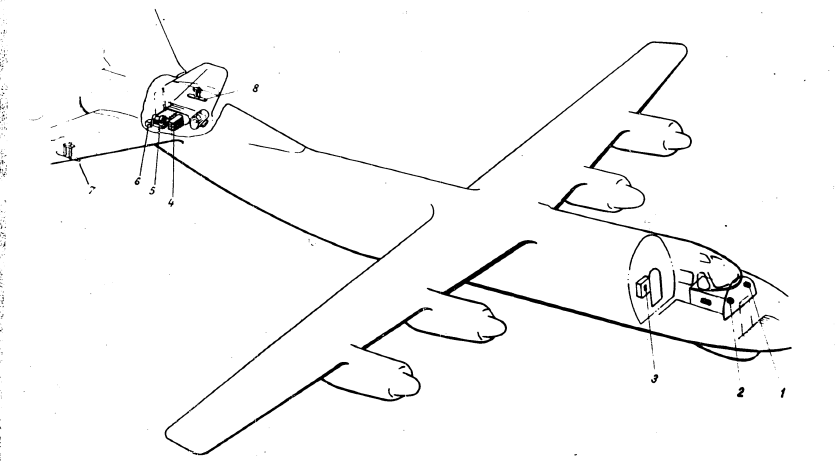

Fig. 38 PB-2 radio altimeter units location.

1-ПРВ-46 indicator /pilot's/; 2-ПРВ-46 indicator /copilot's/; 3-РВ-2 U.B.; 4-РВ-2 transmitter-receiver; 5-РУ-11АМ dyna-motor; 6-ФЗ4-1 filter; 7-РВ-2 transmitting antenna; 8-РВ-2 receiving antenna.

Declassified in Part - Sanitized Copy Approved for Release 2011/12/14 : CIA-RDP80T00246A064200070001-1

Declassified in Part - Sanitized Copy Approved for Release 2011/12/14 : CIA-RDP80T00246A064200070001-1

Notes on Operation

The PB-2 is supplied from the + 28 v d.c. power distribution system only, through the A3P-6 circuit breaker on the radio operator's C.B. panel with subsequent supply of voltage to the 48 k socket of the PB-2 set PY-11 dynamotor.

1. Switching-on and checking the PB-2 radio altimeter on the ground should be performed as follows.

Before flight it is necessary to check all connections of the altimeter units and the condition of the fuse in the transmitter-receiver, and to see that the dynamotor plug is inserted in the socket.

To switch on the altimeter it is necessary to close the A3P-6 circuit breaker labeled "PB-2" on the radio operator's C.B. panel and turn the power switch on either indicator to the "ON" ("Включено") position, which results in d.c. power supply to altimeter from the aircraft distribution system.

On the ground the altimeter is switched-on in the low altitude range. Two to three minutes after starting, the indicator pointer will move from the lower position to the zero mark on the dial. Pointer deflection within ± 2 m from the zero position is permissible.

Outside objects, such as cars, ladders and others located under the aircraft and at a distance of 20 m may cause wide pointer deflections from the zero mark.

Before every flight the pointer zero position should be checked with the altimeter operating in the low altitude range.

The pointer in zero position should be steady and should not oscillate.

The zero position adjusting is accomplished by turning the knobs of the potentiometers labeled "Zero Position Adjustment" ("Установка нуля") with a screw-driver.

Declassified in Part - Sanitized Copy Approved for Release 2011/12/14 : CIA-RDP80T00246A064200070001-1

Declassified in Part - Sanitized Copy Approved for Release 2011/12/14 : CIA-RDP80T00246A064200070001-1

During taxying, the pointer may swing from the zero position within ± 5 m. If the ambient temperature is below -30°C, the radio altimeter should be started 5 to 10 minutes before commencing operation.

17. РБП -3 Panoramic Radar

РБП -3 panoramic radar is used for navigation by referring to land marks and special radar beacon.

The РБП-3 radar provides a means of displaying a terrain image on the P.P.I. Coordinates of the ground installations or coastlines, basins or ships are determined by the aircraft flight altitude, slant range and course angle.

The РБП -3 radar set consists of:

- antenna with rotator and control mechanism (9Д and 10Д units);
- transmitter with a set of external cooling blowers (11Д unit);
- waveguide for connecting the antenna and the transmitter;
- range unit (unit 4Д);
- scanner unit (unit 1Д);
- receiving unit (unit 2Д);
- coupler (unit 8Д);
- power unit (unit 3Д);
- P.P.I. (unit 7Д);
- remote control box (unit 5Д);
- distribution box (unit 6Д);
- air-pump with pressure gauge and dehydrator (unit 12Д);
- Tee-unit (unit 23Д);
- tube equivalent (unit 15Д);
- connection cables.

The РБП -3 radar set units are installed in the aircraft as follows (see fig. 39).

Declassified in Part - Sanitized Copy Approved for Release 2011/12/14 : CIA-RDP80T00246A064200070001-1

Declassified in Part - Sanitized Copy Approved for Release 2011/12/14 : CIA-RDP80T00246A064200070001-1

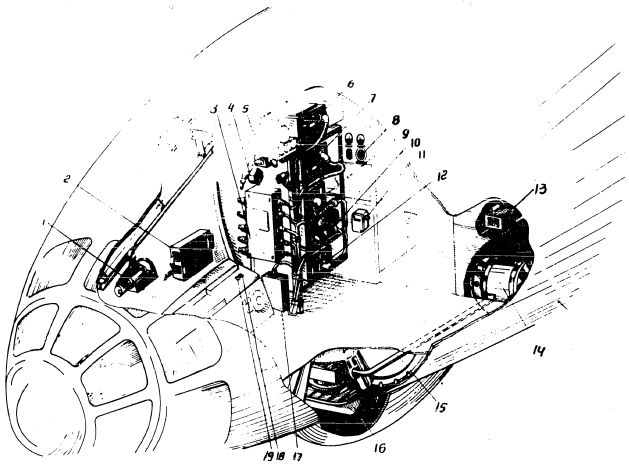

Fig. 39 РЕЦ-3 station location.

1- P.P.I. (unit 7Д); 2-remote control box (unit 5Д); 3- distributing box (unit 6Д); 4-Tube equivalent (unit 15Д); 5-Tee-unit (unit 23Д); 6-receiver (unit 4Д); 7-range unit (unit 4Д); 8-МВ-16 airpump pressure gauge; 9-scanner unit (unit 1Д); 10-power unit;(unit 3Д); 11-power relay box; 12-coupler (unit 8Д); 13-airpump and dehydrator (unit 12Д); 14-transmitter (unit 11Д); 15-waveguide; 16-antenna with rotator and control mechanism (units 9Д and 10Д); 17- РЕЦ-43 filters; 18-airpump heating system С.В.; 19-airpump booster switch С.В.

Declassified in Part - Sanitized Copy Approved for Release 2011/12/14 : CIA-RDP80T00246A064200070001-1

Declassified in Part - Sanitized Copy Approved for Release 2011/12/14 : CIA-RDP80T00246A064200070001-1

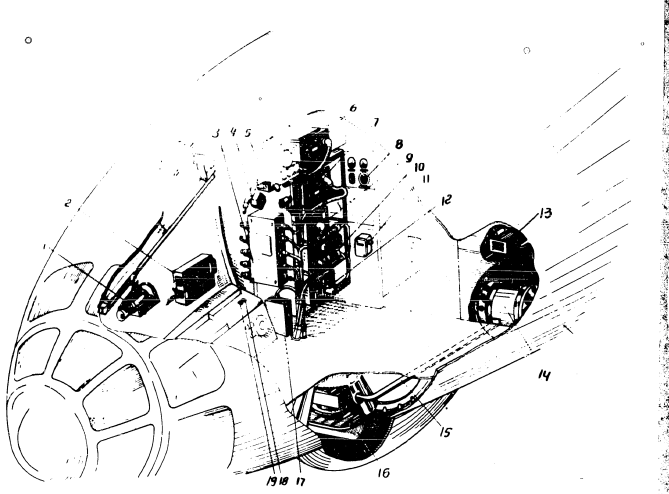

Fig. 39 РБП-3 station location.

1- P.D.I. (unit 7Д); 2-remote control box (unit 5Д); 3- distributing box (unit 6Д); 4-Tube equivalent (unit 15Д); 5-Tee-unit (unit 23Д); 6-receiver (unit 4Д); 7-range unit (unit 4Д); 8-МВ-16 airpump pressure gauge; 9-scanner unit (unit 1Д); 10-power unit;(unit 3Д); 11-power relay box; 12-coupler (unit 8Д); 13-airpump and dehydrator (unit 12Д); 14-transmitter (unit 11Д); 15-waveguide; 16-antenna with rotator and control mechanism (units 9Д and 10Д); 17-ИБП-3 filters; 18-airpump heating system С.В.; 19-airpump booster switch С.В.

Declassified in Part - Sanitized Copy Approved for Release 2011/12/14 : CIA-RDP80T00246A064200070001-1

Declassified in Part - Sanitized Copy Approved for Release 2011/12/14 : CIA-RDP80T00246A064200070001-1

The range units, scanner units, coupler, distribution box, receiving unit, power unit, Tee-unit and the tube equivalent are installed on the starboard rack at the navigator's station between Fr. Nos 3 and 4.

The remote control box is installed above the starboard console between Fr. Nos 2 and 3, and is fastened to sections by four bolts.

The indicator tube is installed on the starboard side wall at the navigator's station. For convenience of operation the tube is mounted on a sliding swivel carriage which moves on rails along the starboard side wall between Fr. Nos 1 and 3 and may be fixed in any position by a stop-screw.

The transmitter and the airpump are installed under the pilot's port bridge between Fr. Nos 4 and 5.

The airpump pressure gauge is installed on the navigator's panel on the starboard side of Fr. No.4.

The antenna, together with the rotator and control mechanism, is installed on the lower surface of the fuselage between Fr. Nos 1 and 3. It is fastened by means of two П-sections and enclosed in a radome.

All bunched conductors connecting various units of the set are enclosed in metal braiding and attached to the airframe with bonding clamps.

To reduce interference between the operating РБП -3 set and the radio equipment a filter is installed in the power circuits before the distribution box. The filter represents a set of capacitance and induction filters and is installed on the РБП -3 rack at the navigator's station.

Notes on Operation

Power to the РБП -3 set is supplied from the aircraft distribution system via a starting box (labeled " Пусковая коробка ") installed in

Declassified in Part - Sanitized Copy Approved for Release 2011/12/14 : CIA-RDP80T00246A064200070001-1

Declassified in Part - Sanitized Copy Approved for Release 2011/12/14 : CIA-RDP80T00246A064200070001-1

the navigator's cabin on Fr. No.4 near the passage below the fuselage reference line.

The starting box contains two КМ-50Д relays. One relay serves to supply the РБП -3 set with 115 v 400 cps a.c. picked off the ПТ-115 v primary bus through the СП-15 fuse. The other relay serves to supply РПВ-3 set with 27 v d.c. picked off the pilot's distribution box through the ИП-30 fuse.

The СП-2 fuse installed in the starting box serves to feed the РБП-3 set power unit with 27 v d.c. with subsequent connection of this circuit to the "ОН" ("Включение") switch on the РБП -3 control panel.

The РБП -3 set switched on, + 27 v voltage is fed to the КМ-50Д relay winding. The relay completes both the 115 v 400 cps a.c. and the 27 v d.c. power circuits.

The airpump (unit 12Д) is supplied with 27 v d.c. power picked off the bus of the navigator's C.B. panel. The pump drive and the pump heating system are fed separately. Power for the pump drive is picked off the АЗС-5 circuit breaker, while power for the pump heating system is picked off the АЗС-2 circuit breaker. Both C.B. are installed on the navigator's C.B. panel.

Before starting, the station should be checked by visually inspection for safe connections between the units, absence of mechanical damages of the units, reliability of contacts in plug and socket connections and presence of fuses in a.c. and d.c. circuits. Control knobs of all units should be checked for correct position. It should be remembered that presence of dirt, grease or frost on the radome seriously impairs functioning of the sight and may even lead to absence of picture on the scope. If the radome is dirty it should be thoroughly washed with water and soap in accordance with instructions on radome cleaning.

Declassified in Part - Sanitized Copy Approved for Release 2011/12/14 : CIA-RDP80T00246A064200070001-1

Declassified in Part - Sanitized Copy Approved for Release 2011/12/14 : CIA-RDP80T00246A064200070001-1

It will be remembered that at low ambient temperatures the pump should be warmed up before starting, lest it fails. Warming up should be initiated 15 minutes before take-off.

Transmitter high voltage should be switched on not earlier than 10 min. after the sight has been switched on by the "Вкл. сети 27В 115В" power switch.

The radar set is controlled by the navigator through the remote control box.

18. СРО-1 Airborne Radio Responder

("Барий" - М)

The СРО-1 airborne radio responder is the responder of an independent identification system operating in the meter band and is designed for receiving challenging signals and automatic transmission of coded reply signals.

The set of the СРО-1 responder consists of:

- transmitter-receiver and power unit;
- coding panel;
- antenna;
- a set of connecting cables.

The СРО-1 responder units are installed in the aircraft as follows:

- СРО-1 antenna - in the lower part of fuselage along the aircraft C.L. between Fr.Nos.21 and 22;
- transmitter-receiver - under the floor of the cargo cabin, starboard, between Fr. Nos.25 and 27;
- coding panel - on the pilots' overhead panel.

19. "Гамма - 54Т" Radar Beacon

The "Гамма-54Т" radar beacon works out target range and

Declassified in Part - Sanitized Copy Approved for Release 2011/12/14 : CIA-RDP80T00246A064200070001-1

closing speed information for the B5-115 computer of the ДБ-65У tail turret and for introduction of audio signals into the interphone system upon target acquisition and when the target comes within the firing range.

Principles of Operation

The operation of the "Гамма-54Т" radar range meter is based on measuring the time for pulses travelling from the range meter antenna to the target and returning [redacted] upon being reflected from the target. A block schematic of the radar range meter is shown in Fig.40.

The radar range meter transmitter generates powerful pulses which are emitted into the space by the range meter antenna. The pulses reflected from the target, if met on their way, are received on the same antenna with some time interval shift "T", corresponding to the time it takes the pulses to travel to the target and return.

The distance to the target "D" is given by $D=\frac{CT}{2}$,

where C - is the propagation velocity of the electromagnetic wave.

Operation with a single antenna is made possible through the use of an antenna switch for switching the antenna from transmission to reception and vice versa.

The signal reflected from target is transmitted from the antenna of the range meter to the input of the receiving unit where is is converted and amplified by an ordinary superheterodyne receiver. From the receiver output the signal is transmitted to the range unit where a d-c. voltage proportional to the range is generated. This is accomplished the following way.

Simultaneously with the starting of the transmitter, a negative high voltage pulse (start) is transmitted from the blocking oscillator of the transmitter modulator to the range unit for firing the first range

Declassified in Part - Sanitized Copy Approved for Release 2011/12/14 : CIA-RDP80T00246A064200070001-1

Declassified in Part - Sanitized Copy Approved for Release 2011/12/14 : CIA-RDP80T00246A064200070001-1

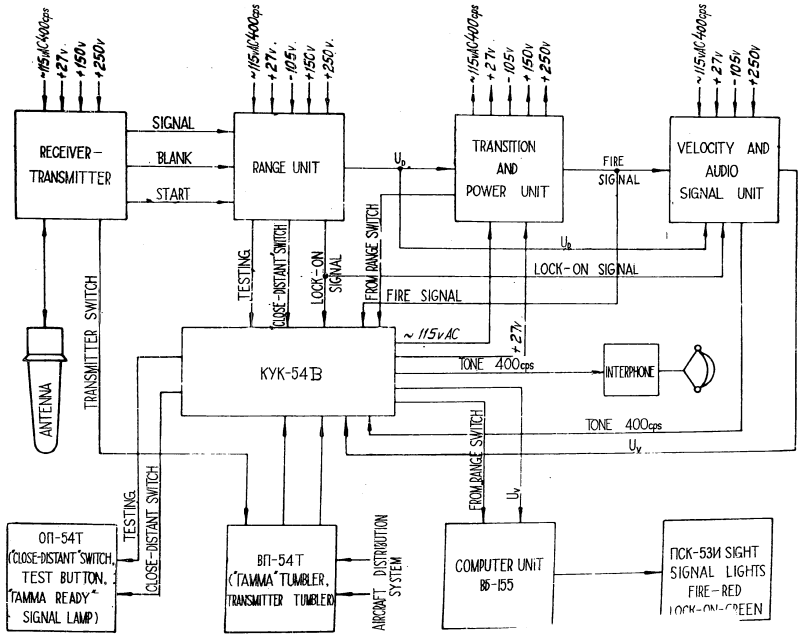

Fig. 40 Block diagram of "Gamma-54T" station.

Declassified in Part - Sanitized Copy Approved for Release 2011/12/14 : CIA-RDP80T00246A064200070001-1

Declassified in Part - Sanitized Copy Approved for Release 2011/12/14 : CIA-RDP80T00246A064200070001-1

generator of that unit. Besides that, a negative pulse from the blocking oscillator (blank) is used for blocking the receiver i.f. amplifier during the transmitter operation.

The range generator produces a linearly variable sawtooth voltage, the value and duration of which are determined by some fixed value voltage, known as the range voltage U_D and generated in this unit. The sawtooth and the range voltages are simultaneously applied to the circuit of comparison in which, when the values of both voltages are equal, two successive strobe pulses are generated. If the pulse reflected from the target is located exactly between the two strobe pulses (in time) the circuit will be balanced.

If the target is moving, the target pulses will shift in the direction of one of the strobe pulses. At the same time, a special circuit known as the integrator, will change the range voltage U_D and, consequently, the moment of coincidence of the sawtooth pulse with the voltage U_D, so that the two strobe pulses will be only on both sides of the return pulse strictly symmetrical.

Thus the range voltage will be always in accordance with changes in the target position (with reference to range), i.e. will be proportional to the target distance.

Automatic tracking of the target is accomplished in this way.

In the absence of a target, the sawtooth voltage changing with a frequency of 1 cps, which is known as the sweep voltage, is applied to the comparison circuit instead of voltage U_D. Since the repetition rate of the h.f. and trigger pulses of the range generator is about 500 cps, for every cycle of the sweep voltage change there will be made 500 comparisons between the sweep voltage and the voltage generated by the range generator. At the same time the unit generates 500 strobe pulses successively shifted by increasing distance.

Declassified in Part - Sanitized Copy Approved for Release 2011/12/14 : CIA-RDP80T00246A064200070001-1

Declassified in Part - Sanitized Copy Approved for Release 2011/12/14 : CIA-RDP80T00246A064200070001-1

So the range sweep is accomplished.

If a target appears, the target pulse at some moment during the travelling of the strobe pulses along the sweep distance will coincide with the middle of the distance between the strobe pulses. At this moment the range unit locks on the target and is switched over from sweep to tracking. The transition from sweep to tracking and vice versa is accomplished by means of two relay switches located in the switching assembly of the range unit.

In addition to that in the switching assembly there are two target change-over relays, which provide switching to tracking close or distant targets.

When the close range relay operates, the range voltage decreases which results in shifting the strobe pulses in the direction of ranges less than those of the previous target.

If a new target appears at a closer range, it will be acquired in the manner presented above. The same procedure takes place when the distant target relay operates.

The close and distant range target relays operate on 27 v voltage d.c. and are controlled by the "CLOSE-DISTANT"("Ближняя - Дальняя ") range target switch, which is located on the range keeper control panel.

The voltage proportional to the target range (U_D) is applied to the transition unit, designed for generation of correction signal fed into the gun-sight in accordance with the range voltage. The correction is fed in the form of a certain resistance value through the range potentiometer. When there is no target, the transition unit is switched off from the range unit and set to a range of about 1900 meters. The range voltage from the range unit is also applied to the closing speed and audio signal unit which generates the

Declassified in Part - Sanitized Copy Approved for Release 2011/12/14 : CIA-RDP80T00246A064200070001-1

Declassified in Part - Sanitized Copy Approved for Release 2011/12/14 : CIA-RDP80T00246A064200070001-1

derivative of the range voltage, i.e. the voltage proportional to the closing speed fed into the B5-257-1 computer unit. In addition to that the range unit feeds the lock-on signal (c.3.) to unit No.9. Unit No.9 feeds a continuous tone signal with frequency of about 400 cps to the СПУ interphone system. When the target is within the effective firing range the "fire" signal (C.O.) is issued by unit No.3 to unit No.9. Unit No.9 then feeds to the interphone system (in "СР" position) an intermittent tone signal with frequency 400 cps and spacing frequency of 1-3cps.

The tracking of the "Гамма -54Т " radar range meter with the ПСК-53И gun-sight consists in variation, according to the target range, of a certain resistance value which is introduced into the gunsight computer, and also in generating voltage proportional to the closing speed, and feeding audio signals to the СПУ interphone system, indicating acquisition of the target and its coming within effective firing range.

The "Гамма - 54Т " range meter is connected by means of the plug connectors to the "КУК-54Т" tail turret control box. The switching of the sight from optical range meter to the radar range meter is accomplished automatically by means of a relay (РЗЦ), installed in the "КУК-54Т" box.

To look on the target the operator must point the cannon barrels in the target direction. When the target comes within the distance of 2000-2400 m, the radar range meter will automatically look on the target.

If the distance to the target is less than 1900 m.(effective firing range)the gunner must align the ПСК-53И sight pip with the target and open fire.

Looking-on the target is indicated by a green signal light, the target coming within effective firing range is indicated by a red

Declassified in Part - Sanitized Copy Approved for Release 2011/12/14 : CIA-RDP80T00246A064200070001-1

Declassified in Part - Sanitized Copy Approved for Release 2011/12/14 : CIA-RDP80T00246A064200070001-1

derivative of the range voltage, i.e. the voltage proportional to the closing speed fed into the B5-257-1 computer unit. In addition to that the range unit feeds the lock-on signal (c.3.) to unit No.9. Unit No.9 feeds a continuous tone signal with frequency of about 400 cps to the СПУ interphone system. When the target is within the effective firing range the "fire" signal (C.O.) is issued by unit No.3 to unit No.9. Unit No.9 then feeds to the interphone system (in "СР" position) an intermittent tone signal with frequency 400 cps and spacing frequency of 1-3cps.

The tracking of the "Гамма -54Т " radar range meter with the ПСК-53И gun-sight consists in variation, according to the target range, of a certain resistance value which is introduced into the gunsight computer, and also in generating voltage proportional to the closing speed, and feeding audio signals to the СПУ interphone system, indicating acquisition of the target and its coming within effective firing range.

The "Гамма - 54Т " range meter is connected by means of the plug connectors to the "КУК-54Т" tail turret control box. The switching of the sight from optical range meter to the radar range meter is accomplished automatically by means of a relay (РЗЦ), installed in the "КУК-54Т" box.

To look on the target the operator must point the cannon barrels in the target direction. When the target comes within the distance of 2000-2400 m, the radar range meter will automatically lock on the target.

If the distance to the target is less than 1900 m.(effective firing range) the gunner must align the ПСК-53И sight pip with the target and open fire.

Locking-on the target is indicated by a green signal light, the target comming within effective firing range is indicated by a red

Declassified in Part - Sanitized Copy Approved for Release 2011/12/14 : CIA-RDP80T00246A064200070001-1

Declassified in Part - Sanitized Copy Approved for Release 2011/12/14 : CIA-RDP80T00246A064200070001-1

signal light. The set of the "Lanza - 54T" radar range meter consists of (Fig.):

- dielectric antenna (unit No.4);
- transmitter-receiver (Unit No.1);
- range unit and i.f. amplifier (unit No.2);
- transition and rectifier units (unit No.3);
- closing speed and audio signal unit (unit No.9);
- coaxial transmission line (unit No.6);
- [redacted]
- C-11M pulse multiplier;
- set of connecting cables.

The unit No.4 is designed for emitting pulses of high frequency energy in a narrow beam in the direction coinciding with the centre line of the cannon bore and for reception of pulses reflected from the target. The radiating rod of the dielectric antennas are made of polystyrene with polystyrene base glass fabric envelope.

The No.1 high frequency unit is designed for:

- generating intense high frequency pulses;
- switching over the high frequency waveguide from reception to transmission;
- conversion of the pulses reflected from the target to the i.f. pulses, and their preamplification;
- generating the trigger pulses of the time synchronization for other units and pulses for the i.f. amplifier blanking when the transmitter operates.

The No.2 unit (range and i.f. amplifier units) is designed for

- basic signals amplifying at i.f., detection and video-signal amplifying;
- automatic determination of the present range to the target, and in the absence of target - automatic range sweeping for target;

Declassified in Part - Sanitized Copy Approved for Release 2011/12/14 : CIA-RDP80T00246A064200070001-1

Declassified in Part - Sanitized Copy Approved for Release 2011/12/14 : CIA-RDP80T00246A064200070001-1

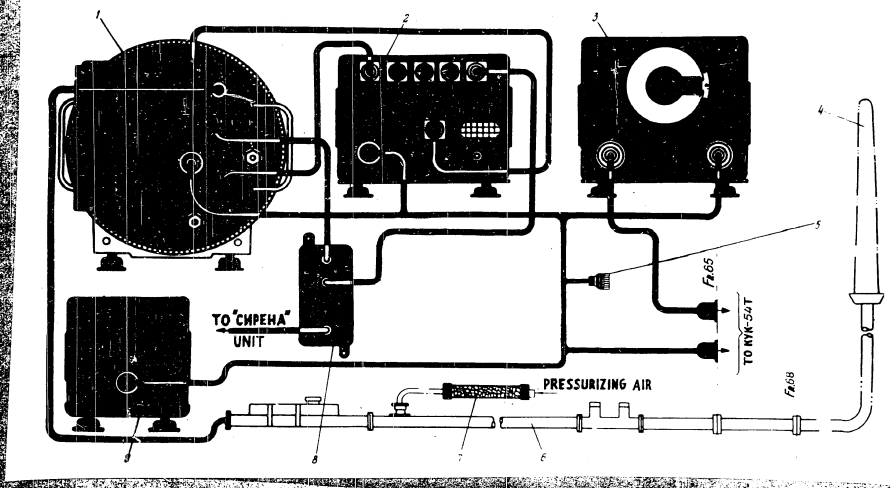

Fig. 41 Block diagram of "Gamma-54T" [illegible]

1-receiver (unit No.1); 2-range unit and [illegible]; 3-transition unit and rectifiers (unit. No.3); [illegible]; 5-PK-1 distribution box (unit No.5); [illegible]; 7-dehydrator; 8-G-11M pulse [illegible]; 9-velocity and audio signal (unit No.9).

Declassified in Part - Sanitized Copy Approved for Release 2011/12/14 : CIA-RDP80T00246A064200070001-1

Declassified in Part - Sanitized Copy Approved for Release 2011/12/14 : CIA-RDP80T00246A064200070001-1

- automatic switching of the set from sweep to tracking and vice versa;

- target lock-on signals generating;

- automatic gain control of the receiver at i.f.

The range unit is located in a removable housing.

On the front panel of the unit are located: ШР-20 plug connector for connection of the range unit to the РК-1 distribution box, and five pulse lead connectors: "blank"("Бланк"), "video"("Видео "), "calibrating "("Калибровка "), "blocking"("Блокинг ") and "start" ("Запуск ").

The "blank", "start" and "i.f. amplification" (УПЧ) connectors serve for connection with other units of the system; the "blocking", "calibrating" and "video" connectors are test connectors. The adjustment of the unit is accomplished by means of six potentiometers located on the front panel: "relay"("Реле"), automatic gain control AGC (АРУ), "noise" ("Шум"), "sweep"("Поиск"), " discriminator"("Дискримина-тор"), and "balancing"(" Симметрирование ").

On the front panel is also located the ПК-20 button. For testing the range meter on the ground with the button depressed in the "audio" ("Звучание ") position, all transmission-reception circuitry is tested by means of the С-4 control resonator and 25-И synchroscope.

For in-flight testing the range meter a provision is made in the range unit for reception of pulses returned from the ground during flight at altitudes of 10 to 15 km. (by means of ten fold delay of the growth of the range generator sawtooth voltage).

For checking the operation of separate circuits there are sixteen test points in the range unit.

The No.3 unit(transition and power unit) is designed for:

- changing the resistance being put into the side computer circuits in relation to the range voltage value;

Declassified in Part - Sanitized Copy Approved for Release 2011/12/14 : CIA-RDP80T00246A064200070001-1

Declassified in Part - Sanitized Copy Approved for Release 2011/12/14 : CIA-RDP80T00246A064200070001-1

- generation of a signal for opening fire;
- supply of rectified regulated voltage to the range meter units.

The No.3 unit is located in a housing similar to that of the No.2 unit. On the front panel of the unit there are plug connectors, fuses, test button and adjusting potentiometers for setting +250 V, and steepness setting. On the front panel on the No.3 unit there is also the range scale with indirect lighting. The first division of the range scale corresponds to 200 m., the last - to 2000 m.; the scale is marked every ten divisions (100 m.), the division value being 10 m.

The No.9 unit (closing speed and audio signal unit) is designed for generating voltage proportional to the target closing speed, and audio signals transmitted to the СПУ interphone system when the radar range meter is locked on the target and the target comes within the effective firing range. The unit is located in a housing with louvers for heat dissipation. On the front panel of the unit are installed the ШР9-01 plug connector, [illegible] potentiometers - "Zero setting" ("Установка нуля"), "Calibrating" ("Калибровка"), "Balancing" ([illegible]), "Tone control" ("Регул. тона") and the КТ1 test point for checking voltage proportional to the closing speed.

The No.6 unit (coaxial transmission line) is designed for transmission of high frequency energy from the high frequency unit (unit No.1) to the antenna (unit No.4), and from the antenna to unit No.1.

The No.6 unit consists of the following elements:

- rigid section;
- flexible section;
- capacitive rotating joints;
- bidirectional coupler;
- rotating joint;

Declassified in Part - Sanitized Copy Approved for Release 2011/12/14 : CIA-RDP80T00246A064200070001-1

Declassified in Part - Sanitized Copy Approved for Release 2011/12/14 : CIA-RDP80T00246A064200070001-1

- matching transformer;
- dehydrator.

The most part of the feeder consists of rigid sections terminating in hermetic flange connections.

The effective diameters of the feeder (the diameter of the internal conductor 7 mm. and external conductor 16 mm.) provide for the characteristic impedance of 50 ohms. The feeder internal conductor is supported with polystyrene beads. The flexible section of the feeder made of PK-6 cable is used for connection of the No.1 unit with the rigid part of the feeder. For transmission of high frequency energy to the antenna rotating with the mount about the vertical and horizontal axes, the No.6 unit comprises a rotating joint and a capacitive rotating joint. The capacitive rotating joint provides antenna rotation in the vertical plane, and rotating joint - in the horizontal plane.

For measurement of the high frequency energy transmitted from the No.1 unit to the antenna a directional coupler is mounted in one of the feeder sections. The matching of the antenna to the feeder in the No.6 unit is provided for by a matching transformer representing a length of coaxial line with two parallel stubs.

A constant pressure of about 1 atm. is maintained in the coaxial line, for which the line is connected with the aircraft air system by means of reducing valve No.436. To avoid moisture entering the No.6 unit, the air from the reducing valve is delivered to the unit through a dehydrator. [redacted]

The C-11M pulse multiplier is used as a voltage distributor for blocking the "Sirena-2" ("Сирена - 2") station during operation of the "Гамма - 54Т" range meter.

Declassified in Part - Sanitized Copy Approved for Release 2011/12/14 : CIA-RDP80T00246A064200070001-1

Declassified in Part - Sanitized Copy Approved for Release 2011/12/14 : CIA-RDP80T00246A064200070001-1

TECHNICAL DATA

of the " Гамма - 54Т" radar range meter

1. The range of the radar range meter in operation against fighter aircraft - not less than 1900 m.

2. Acquisition and range tracking of the target is accomplished at a distance not less than 2000 m. Locking on the target is indicated by illuminating of a signal light and by a continuous 400 cps audio signal in the interphone. The target coming within the affective firing range (1900 m.) is indicated by illuminating a signal light and by an intermittent 400 cps audio signal in the interphone. On acquisition of the target the gun-sight is automatically switched over from operation in set with the optical range meter to operation in set with the radar range meter providing automatical issue of range and closing speed information.

3. At a relative closing speed of the aircraft and target of 0 to 200 m./sec. the radar range meter issues a voltage varying from 0 up to 100 V. proportional to the closing speed.

4. Minimum measuring range of the range meter (dead zone) is not more than 180 m.

5. Maximum range measurement error for distance within 300-1900m. does not exceed $\pm$35 m.

6. Antenna beam angle (for half-power beam width) is sufficient for effective firing with the ПСК-53И optical gun-sight at maximum lead angle up to 10°.

7. When several targets come within the antenna beam, the range meter automatically locks on the nearest target; besides, it is possible to select a more distant target with the "Close-Distant Target" (Ближняя-дальняя цель") tumbler switch.

Declassified in Part - Sanitized Copy Approved for Release 2011/12/14 : CIA-RDP80T00246A064200070001-1

Declassified in Part - Sanitized Copy Approved for Release 2011/12/14 : CIA-RDP80T00246A064200070001-1

8. Operating wave of the range meter - about 16 centimeters (frequency 1875 Mc).

9. Pulse peak power of transmitter not less than 18 kwt;

10. Pulse repetition rate 500±50 cps.

11. High frequency pulse duration (for voltage amplitude level 0.7) 0.45 - 0.65 μsec.

12. Lock-on sensitivity of receiving channel (relative to one wt) not less than:

a) within 300-350 m. - 90 db;

b) within 1400-1600 m. - 117 db.

13. Antenna half-power beam width in vertical plane 35°±3° , in horizontal plane 38±3°.

14. The radar range meter operates reliably at ambient temperatures varying from -60°C up to +50°C and at altitudes up to 15000 m, and retains its serviceability after exposure to relative humidity 98% at +20°C.

15. The radio range meter is supplied with 27 V d.c. and 115 V 400 cps a.c. through the KVF-54T relay - distributing unit of the ДБ-65У tail turret; no fuse or circuit breaker is provided.

Power consumption d.c. - 100 wt.; a.c. - 500 wt.

Units of the "Гамма -54Т" radar range meter are located as follows (Fig.42):

- antenna is installed in the tail turret between the cannon barrels and moves with them;

- coaxial transmission line is laid inside the fuselage (port) between frames Nos.60-68 through the gunner's pressure cabin: outside the cabin the line is covered with a removable housing;

- dehydrator and reduction valve 436 - between Fr.Nos.60-61;

- units Nos.1, 2, 3, 9[redacted] and 3-11Ж units - in dorsal fin, in the vicinity of Fr.Nos. 59-60;

Declassified in Part - Sanitized Copy Approved for Release 2011/12/14 : CIA-RDP80T00246A064200070001-1

Declassified in Part - Sanitized Copy Approved for Release 2011/12/14 : CIA-RDP80T00246A064200070001-1

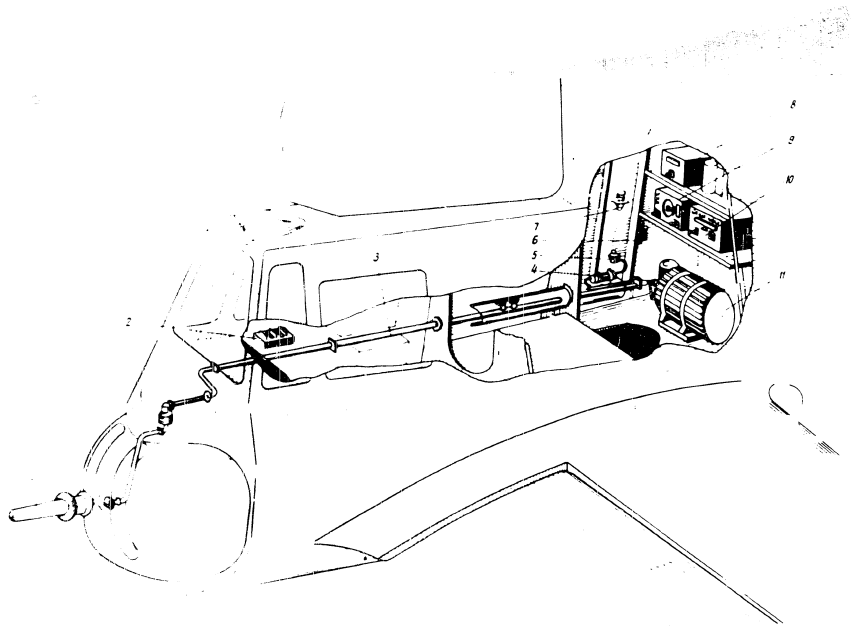

Fig. 42 Location of "Gamma -5M" range meter.

1-dielectric antenna (unit No.4); 2- radio range meter control panel; 3-coaxial transmission line (unit No.6); 4-dehydrator; 5-air reducer; 6-C-11M pulse multiplier; 7- "[illegible]" plug connector; 8- velocity and audio signal unit (unit No.9); 9-transition unit and rectifier (No.3); 10-range unit and i.f. amplifier (unit No.2); 11-transmitter-receiver (unit No.1).

Declassified in Part - Sanitized Copy Approved for Release 2011/12/14 : CIA-RDP80T00246A064200070001-1

Declassified in Part - Sanitized Copy Approved for Release 2011/12/14 : CIA-RDP80T00246A064200070001-1

- range meter control panels - in the gunner's cabin.

- "Range meter ready for operation" indicator, "Close target-distant target" ("БЦ - ДЦ") range switch and the "Test" ("Проверка") button - on the "СП-54Т" main control panel;

- tumblers "Гамма" and "Transmitter" ("Передатчик") - on the ВП-54Т auxiliary control panel;

- signal lamps ("Lock-on" - green, "Fire" - red) - on the sight head.

NOTES ON OPERATION

The "Гамма-54Т" radar range meter is controlled by the gunner.

To switch on the range meter it is necessary:

- to switch on the tail turret and gun-sight in accordance with operating instructions;

- to place the "Transmitter" ("Передатчик") and "Гамма-54Т" tumblers in the "ON" ("ВКЛЮЧЕНО") position.

Then power will be supplied to all units of the station except the anode circuit of the unit No.1 modulator, which is switched on after the time relay operates, i.e. in 2-3 minutes. The readiness of the range meter for operation is indicated by the transmitter signal light coming on.

When a target appears, the gunner must point the cannon barrels in the direction of the target.

When the target is within 1900-2200 m. the range meter will lock on the target and start tracking the target in range. Simultaneously the green light on the gun sight head goes on and a continuous 400 cps audio signal indicating locking on the target is heard. (The signal loudness may be regulated by the "Volume control" ("Регулировка тона") potentiometer, located on the front panel of

Declassified in Part - Sanitized Copy Approved for Release 2011/12/14 : CIA-RDP80T00246A064200070001-1

Declassified in Part - Sanitized Copy Approved for Release 2011/12/14 : CIA-RDP80T00246A064200070001-1

unit No.9"). When the target is at a distance of less than 1900 m, the red light on the sight head comes on, and an intermittent 400 cps audio signal indicating target being within the effective firing range is heard in the interphone system. If several targets come within the range meter operating range, the gunner can switch over to tracking distant or close targets by placing the "Close-Distant Target" ("Ближняя - Дальняя цель ") tumbler in the corresponding position.

Ground checking of the range meter for proper operation is accomplished by locking on ground returns. In-flight checking is accomplished by locking it on aircraft flying within the effective range of the range meter. In absence of aircraft it is necessary to direct the antenna to the ground by turning the turret, and depress the "Test" ("Проверка ") button. This will result in a tenfold increase of the search range, and the range meter will lock on the ground at distances up to 20 km. The signal lights must come on.

Before flight it is necessary to increase pressure in the No.1 unit through the "External boost" ("Внешний поддув ") fitting to the corresponding pressure value depending on the ambient temperature, as given in the operating instruction for the " Гамма - 54Т" radar range meter.

The pressure is checked by a gauge connected to the lower valve on the top cover of unit No.1. After building up the pressure, the caps on the "External boost" (" Внешний поддув ") and "Heterodyne" ("Гетеродин ") fittings and on the gauge valve must be tightened.

Directly before flight it is necessary to remove the protecting antenna cover. After flight it is necessary to check the condition of silica gel in the dehydrator of unit No.6. Crystals must be of blue colour. If the colour has changed to brown, the silica gel should be dried or replaced.

Declassified in Part - Sanitized Copy Approved for Release 2011/12/14 : CIA-RDP80T00246A064200070001-1

Declassified in Part - Sanitized Copy Approved for Release 2011/12/14 : CIA-RDP80T00246A064200070001-1

It should be remembered:

1. The range meter will be ready for operation only in two minutes after placing the " Гамма-54Т " tumbler in the "ON" position, therefore the tumbler should be switched on in advance, i.e. usually shortly after take-off. To avoid possible detection by the enemy, the "transmitter" (" Передатчик ") tumbler should be switched on only when a target is likely to appear.

2. If the 115 v cps voltage is cut off, the " Гамма-54Т " unit should immediately switched off. Availability of 115 v cpc voltage is checked by an a.c. voltmeter, installed in the gunner's cabin.

20. " Сирена-2 " Radar Station

The station is designed for warning the aircrew of the aircraft being illuminated from the tail by a radar range meter or radar gun-sight installed in enemy aircraft and operating in the three-centimeter band. The station consists of a crystal receiver with an amplifier and an audio signal device. The warning signals generated by the station are fed to the input of the (ПУ-7 low frequency amplifiers and the output of these amplifiers is fed into the interphone system.

When the aircraft is illuminated by an enemy aircraft radar range meter, audio signals are heard in the crew members subsets, the tone of the signals depending on the illumination intensity. Depending on the magnitude of the incoming pulses, intermittent audio signals of high tone or a continuous "howling" signal of variable tone are heard in the interphone system. The pulses of high magnitude produced a continuous low tone signal with weak "howling" or without "howling". The air crew members can judge by the variation of the audio signal tone whether the distance between their aircr ft and the enemy aircraft is closing or opening.

Declassified in Part - Sanitized Copy Approved for Release 2011/12/14 : CIA-RDP80T00246A064200070001-1

Declassified in Part - Sanitized Copy Approved for Release 2011/12/14 : CIA-RDP80T00246A064200070001-1

The " Сирень-2 " airborne station consists of (Fig. 12):

- unit No.1 (antenna);
- unit No.2 (amplifier-indicator unit);
- unit No. 3B (control panel);
- two units No.4 (tracking units);
- unit No.5 (communication link to СПУ interphone);
- connecting cables.

The No.1 unit consisting of a receiving horn antenna receives signals and transmits them to a germanium detector located in the pickup head. Negative pulses from the pickup head are transmitted through the connecting cable to the amplifier-indicator unit. The No.1 unit is installed on a shock absorbing bracket on the gunner's cabin under the fairing covering the ФБВ light.

Unit No.2 (amplifier-indicator unit) consists of: low frequency amplifier, control tube, first multivibrator generating basic tone pulse, second multivibrator - modulating basic tone pulse, another modulating multivibrator, preliminary and output stages of the audio signal amplifier, and power supply filter. The unit is installed on the bracket (port) between Fr.Nos.63-64 in the vicinity of the manhole.

The No.3B unit (control box) consists of: signal switching off tumbler with a signal light, "unit No.4 power supply" (" Питание блока № 4 ") tumbler switch, and a variable resistance of the output signal regulator. The No.3B unit is installed on the pilot's armour-plate above the console.

The No.4 units consist of two units: one for tracking with the РБП-3 radar station is installed on the rack under the pilot's bridge, the other for tracking with the " Гамма - 54Т " radar range meter is installed on the attachment brackets of the " Гамма - 54Т " unit in the vicinity of Fr.Nos.58-59.

Declassified in Part - Sanitized Copy Approved for Release 2011/12/14 : CIA-RDP80T00246A064200070001-1

Declassified in Part - Sanitized Copy Approved for Release 2011/12/14 : CIA-RDP80T00246A064200070001-1

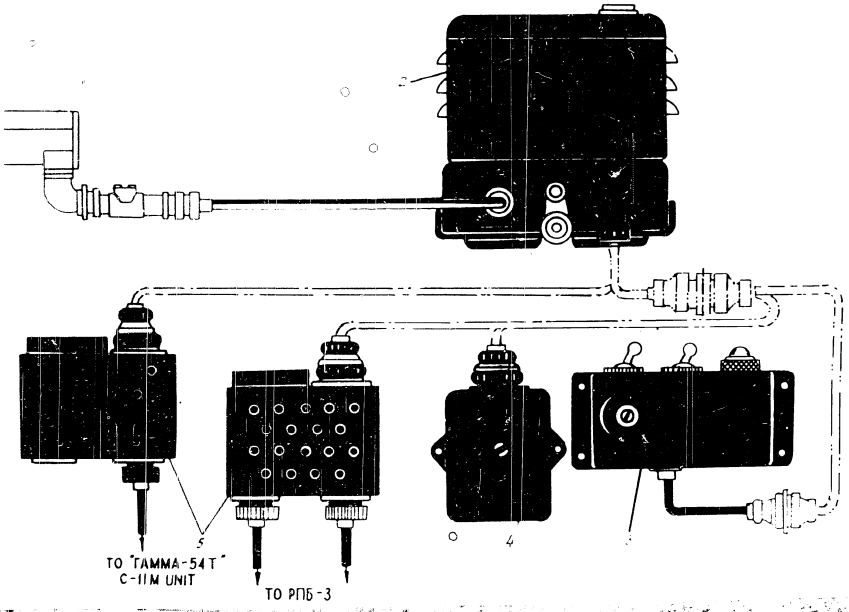

fig.43 Block diagram of "Syrena-2" station.

1-antenna (unit No.1); 2-amplifier-indicator unit (unit No.2); 3-control box (unit No.3B); 4-communication link (unit No.5); 5-tracking units (unit No.4).

Declassified in Part - Sanitized Copy Approved for Release 2011/12/14 : CIA-RDP80T00246A064200070001-1

Declassified in Part - Sanitized Copy Approved for Release 2011/12/14 : CIA-RDP80T00246A064200070001-1

Unit No.5 which is the communication link for the ПУ-3 amplifier and for the РСИУ-40 low frequency cable is installed in the crew cabin on the wall of Fr.No.9 (port).

For location of " Сирена-2 " station units refer to Fig.44.

Basic Technical Data of the " Сирена - 2 " Station

1. Operating wave band - from 3.15 up to 3.45 cm.

2. Sensitivity to the pickup head pulses at pulse duration 0.5 μsec. and pulse repetition rate f=1000 per sec., for the given wave band is not less than 29 db($0.13.10^{-5}$ wt), and for wave length of 3.2 cm. - 34±2 db.(below one 1 mwt level).

3. Field-of-view solid angle - 50-80° in the vertical and horizontal planes.

4. Antenna polarisation - circular.

5. Output voltage amplitude - up to 20 v. with load resistance 0.3 kohms, and up to 30 v with load resistance 15 kohms. Warning is accomplished by means of audio signal.

6. Output signals from the station are fed into the self-listening circuit of the РСИУ -40 station and to the СИ-7 amplifier circuit.

7. Power supply from aircraft d.c. distribution system - 27 v ±10%.

8. Power consumption from 27 v d.c. distribution system not exceeding 50 wt (with tracking units - 75 wt).

9. For the given sensitivity of 34db coverage range of the station with the radar range meter operating in the 3-cm band - up to 5-6 km.

Notes on Operation

The " Сирена - 2 " station is supplied with 27 v d.c. only, through the АЗР-2 circuit breaker on the radio operator's C.B. panel. The pre-

Declassified in Part - Sanitized Copy Approved for Release 2011/12/14 : CIA-RDP80T00246A064200070001-1

Declassified in Part - Sanitized Copy Approved for Release 2011/12/14 : CIA-RDP80T00246A064200070001-1

Unit No.5 which is the communication link for the СПУ-7 amplifier and for the РСИУ-4Д low frequency cable is installed in the crew cabin on the wall of Fr.No.9 (port).

For location of " Сирена-2 " station units refer to Fig.44.

Basic Technical Data of the " Сирена - 2 " Station

1. Operating wave band - from 3.15 up to 3.45 cm.

2. Sensitivity to the pickup head pulses at pulse duration 0.5 μsec. and pulse repetition rate f=1000 per sec., for the given wave band is not less than 29 db($0.13.10^{-5}$ wt), and for wave length of 3.2 cm. - 34±2 db.(below one 1 mwt level).

3. Field-of-view solid angle - 50-80° in the vertical and horizontal planes.

4. Antenna polarization - circular.

5. Output voltage amplitude - up to 20 v. with load resistance 3.3 kohms, and up to 30 v with load resistance 15 kohms. Warning is accomplished by means of audio signal.

6. Output signals from the station are fed into the self-listening circuit of the РСИУ-4Д station and to the СП-7 amplifier circuit.

7. Power supply from aircraft d.c. distribution system - 27 ±10%.

8. Power consumption from 27 v d.c. distribution system not exceeding 50 wt (with tracking units - 75 wt).

9. For the given sensitivity of 34db coverage range of the station with the radar range meter operating in the 3-cm band - up to 5-6 km.

Notes on Operation

The " Сирена - 2 " station is supplied with 27 v d.c. only, through the ПО-2 circuit breaker on the radio operator's C.B. panel. The pre-

Declassified in Part - Sanitized Copy Approved for Release 2011/12/14 : CIA-RDP80T00246A064200070001-1

Declassified in Part - Sanitized Copy Approved for Release 2011/12/14 : CIA-RDP80T00246A064200070001-1

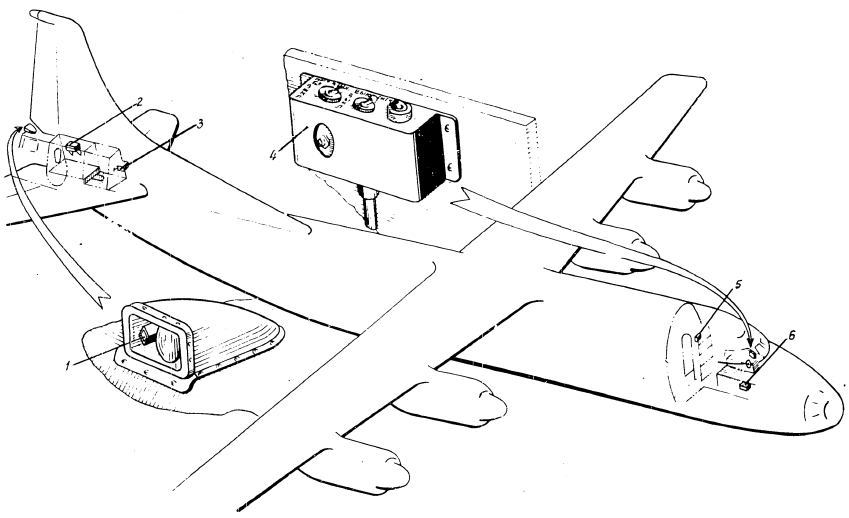

Fig. 44 Location of "Syrena-4" station.

1-antenna (unit No.1); 2-amplifier-indicator unit (unit No.2); 3-tracking unit for "Gamma-54T" (unit No.4); 4-control box (unit No.3); 5-communication link (unit No.5); 6-tracking unit for RSP-3 (unit No.4).

Declassified in Part - Sanitized Copy Approved for Release 2011/12/14 : CIA-RDP80T00246A064200070001-1

Declassified in Part - Sanitized Copy Approved for Release 2011/12/14 : CIA-RDP80T00246A064200070001-1

liminary switching on of the stations is accomplished by the radio operator. Final switching on is accomplished by the pilot from the pilot's console, which is indicated by a green signal light coming on. If necessary, the audio signal may be switched off by means of the "audio signal off" tumbler on the "ЗП" unit; this causes the red signal light to illuminate.

For checking the operation of the "Сирень-2" station from the "РБП-3" or "Сирень-2" stations it is necessary to switch on one of these radar stations. Then the "unit No.4 power supply" ("Питание узла №4") tumbler on the control panel should be placed in the "OFF" position, in this case the air crew will hear the signal of their "own" radar station, which will indicate that the "Сирень-2" station is in proper condition.

CAUTION: The station sensitivity may be adjusted only when checking the station with the ГСС type 43-И test signal generator or type 31-ИМ radar tester. If the station sensitivity is adjusted to 33-34 db, warning of approaching fighter aircraft (with a 3 cm. meter band radar range meter) will be provided at distances of 5-6 km. Warning audio signals during fighter approach will vary in about the following way: distance from 5 to 4 km. - intermittent signals, from 4 to 2-2.5km - "howling" signals, and from 2-2.5 km and up to contact - a continuous low tone signal.

21. "АВРА-45" Search and Rescue Station

The "АВРА-45" radio station is a station used for transmitting distress signals or the aircraft bearing in case of emergency. The radio station allows to transmit telegraph signals manually or automatically.

Declassified in Part - Sanitized Copy Approved for Release 2011/12/14 : CIA-RDP80T00246A064200070001-1

Declassified in Part - Sanitized Copy Approved for Release 2011/12/14 : CIA-RDP80T00246A064200070001-1

The telegraph signals are transmitted on a fixed frequency of 500 kc. If necessary the station may be used for transmitting light signals. In this case the radio transmission is switched off.

The radio station is supplied with power from a manually driven generator. As installed in the aircraft, the "ABPA-45" radio station is not provided with a parachute.

The "ABPA-45" radio station consists of:

- radio transmitter;
- rubber balloon for lifting the antenna;
- light signal lamp;
- spare antenna;
- kite for lifting the antenna;
- pipe for filling the rubber balloon with hydrogen;
- hydrogen generator;
- packing ;
- lower capacitance.

Radio Station Basic Technical Data

1. Fixed operating frequency 500 kc.

2. Frequency calibration accuracy ± 1 kc.

3. Drift of transmitter frequency after warm-up for 30 min. does not exceed ± 500 cps.

4. Modulation frequency - within 800-1000 cps.

5. Antenna equivalent current not less than 300 ma.

6. The radio station is provided with a coding unit for automatic transmission of the following signals:

- alternate transmission of "SOS" radio signals and continuous signals;

Declassified in Part - Sanitized Copy Approved for Release 2011/12/14 : CIA-RDP80T00246A064200070001-1

Declassified in Part - Sanitized Copy Approved for Release 2011/12/14 : CIA-RDP80T00246A064200070001-1

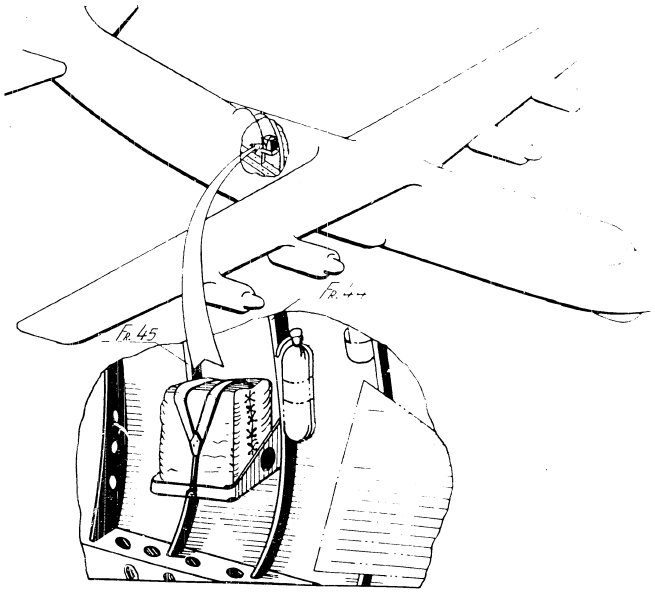

Fig. 45 Location of ARK-25 antenna

Declassified in Part - Sanitized Copy Approved for Release 2011/12/14 : CIA-RDP80T00246A064200070001-1

Declassified in Part - Sanitized Copy Approved for Release 2011/12/14 : CIA-RDP80T00246A064200070001-1

duration of each signal 20-22 sec.;

- alternate transmission of "A-A" hearing signals and 4 continuous signals; duration of each signal 20-22 sec.

7. The radio station is provided with a key-button for transmission of signals by hand.

8. Radio station may be used for transmission of light signals:

- light signals in Morse code (by hand);

- continuous light signal.

9. Transfer from one mode of operation to the other is accomplished by a switch.

10. The "RPA-45" radio station is supplied with power from the handle of AP-1 generator with manual drive. The generator drive should be rotated with a speed of 80-110 rpm.

11. The transmitter antenna is lifted by a kite or hydrogen-inflated rubber balloon. The rubber balloon is inflated by the use of a hydrogen generator.

12. The radio transmitter and the hydrogen generator are hermetically sealed. The station in soft packing can stay afloat on water and retain its serviceability.

13. The station retains serviceability after exposure to temperatures $\pm 50^{\circ}$C and relative humidity up to 98%.

14. Weight of complete set in packing (without parachute) is up to 17.2 kg.

Notes on Operation

Before abandoning the aircraft one of the crew members must take the "RPA-45" radio station in packing.

To prepare the radio station for operation it is necessary:

- to take the radio transmitter out of the packing;

- to insert the handle into the socket and fix it with a screw;

Declassified in Part - Sanitized Copy Approved for Release 2011/12/14 : CIA-RDP80T00246A064200070001-1

Declassified in Part - Sanitized Copy Approved for Release 2011/12/14 : CIA-RDP80T00246A064200070001-1

duration of each signal 20-22 sec.;

- alternate transmission of "A-A" bearing signals and 4 continuous signals; duration of each signal 20-22 sec.

7. The radio station is provided with a key-button for transmission of signals by hand.

8. Radio station may be used for transmission of light signals:

- light signals in Morse code (by hand);

- continuous light signal.

9. Transfer from one mode of operation to the other is accomplished by a switch.

10. The "ABPA-45" radio station is supplied with power from the AP-1 generator with manual drive. The generator drive handle should be rotated with a speed of 80-110 rpm.

11. The transmitter antenna is lifted by a kite or hydrogen-inflated rubber balloon. The rubber balloon is inflated by the use of a hydrogen generator.

12. The radio transmitter and the hydrogen generator are hermatically sealed. The station in soft packing can stay afloat on water and retain its serviceability.

13. The station retains serviceability after exposure to temperatures $\pm 50^{\circ}$C and relative humidity up to 98%.

14. Weight of complete set in packing (without parachute) is up to 17.2 kg.

Notes on Operation

Before abandoning the aircraft one of the crew members must take the "ABPA-45" radio station in packing.

To prepare the radio station for operation it is necessary:

- to take the radio transmitter out of the packing;

- to insert the handle into the socket and fix it with a screw;

Declassified in Part - Sanitized Copy Approved for Release 2011/12/14 : CIA-RDP80T00246A064200070001-1

Declassified in Part - Sanitized Copy Approved for Release 2011/12/14 : CIA-RDP80T00246A064200070001-1

- to assemble the lower capacitance with antenna for on the ground use;

- to assemble the kite (if using it) and to tie on the antenna;

- to fly the kite (taking care the trailing antenna wire does not [illegible] contact with water or ground);

- to ground the transmitter.

In still air the antenna is lifted by the hydrogen inflated rubber balloon. After the antenna has been lifted (by means of the kite or [illegible]n), the antenna fairlead connected, ground wire thrown into water or attached to the lower capacitance, and the transmitter held firmly between the operator's legs, the radio station is ready for transmitting radio or light signals. As a rule, key - manipulation requires the assistance of a second operator. When sending light signals, the radio transmitter is not used.

Emergency over, the station is disassembled, packed and taken away.

The [illegible] A-45" radio station is stowed in the aircraft between Fr. [illegible] (port) in a special holder and fastened with [illegible] (Fig. 45).

Declassified in Part - Sanitized Copy Approved for Release 2011/12/14 : CIA-RDP80T00246A064200070001-1

Declassified in Part - Sanitized Copy Approved for Release 2011/12/14 : CIA-RDP80T00246A064200070001-1

S E C T I O N V

AIRCRAFT BONDING

The aircraft bonding system allows:

- to prevent formation of electrical charges between certain parts of the aircraft during flight, which may cause fire or radio interference;

- to form a reliable single-wire electrical network, using the airframe as the return wire;

- to provide a constant balancing capacitance for antennas.

Interference from generator voltage regulators is eliminated by the capacitors with great capacitance capability, chokes, and metal-braid shielding of cables. Interference from dynamotors and converters is eliminated by filters installed on these units.

Interference from various electro-mechanisms and relays is also eliminated by filters and capacitors.

Spark-quench capacitors are installed to prevent sparking of closing and opening relay contacts.

Electrostatic interference is eliminated by flexible metal strips connecting all movable metal parts of the aircraft to the airframe, and providing a constant and reliable contact between the aircraft units, thus forming a low resistance network.

Besides that, all metal parts of equipment, electro and radio instruments, etc are also connected to the airframe by means of bonding strips.

Pipe-lines of various systems fastened with rubber-padded clamps are also provided with bonding strips to ensure reliable electrical contact with the airframe.

All bonding strips are standard and differ only in length, cross-

Declassified in Part - Sanitized Copy Approved for Release 2011/12/14 : CIA-RDP80T00246A064200070001-1

Declassified in Part - Sanitized Copy Approved for Release 2011/12/14 : CIA-RDP80T00246A064200070001-1

section and the size of tips. Bonding strips are made of copper braids with squeezed-on brass tips with holes for bolts. Bonding strips are attached to aircraft system units and the airframe by bolts, the mating surfaces being previously thoroughly cleaned.

Prior to bolting and riveting, paint and anodic oxide film should be thoroughly removed from the mating surfaces of the units to be attached, which provides for low contact resistance.

To eliminate radio interference, static electricity accumulating on the aircraft surface during flight is discharged into the atmosphere by RV-1 static dischargers (Fig.46) attached to the wing and tail unit tips.

Grounding Pins

Grounding pins serve to carry away static electricity accumulating during aircraft refuelling, etc, into the ground. During flight the grounding pins are kept in cups located in the starboard and port landing gear gaiters. Grounding pins are accessible through open landing gear doors. Grounding pins are connected to the airframe with BPBA wire and steel cable preventing wire rupture.

When the aircraft is parked it is necessary to drive the grounding pin into the ground (if possible) or place it on a corrugated anvil (if the aircraft is on a concrete area).

Static electricity accumulated during flight is discharged by metal whisks attached to the main landing gear bogies (Fig.47) and is carried away when the ... tyres come into contact with the ground.

Declassified in Part - Sanitized Copy Approved for Release 2011/12/14 : CIA-RDP80T00246A064200070001-1

Declassified in Part - Sanitized Copy Approved for Release 2011/12/14 : CIA-RDP80T00246A064200070001-1

50X1-HUM

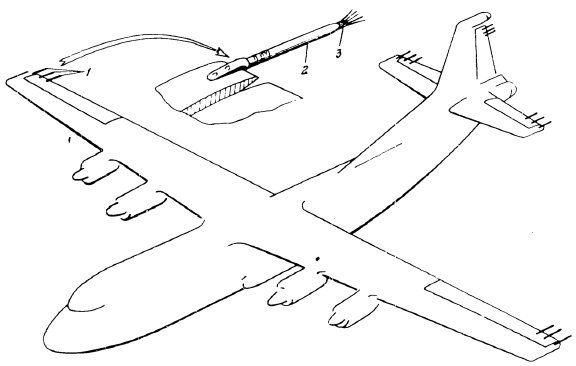

Fig. 46 Static dischargers installation.
1- static discharger; 2-tube; 3- wick.

Declassified in Part - Sanitized Copy Approved for Release 2011/12/14 : CIA-RDP80T00246A064200070001-1

Declassified in Part - Sanitized Copy Approved for Release 2011/12/14 : CIA-RDP80T00246A064200070001-1

50X1-HUM

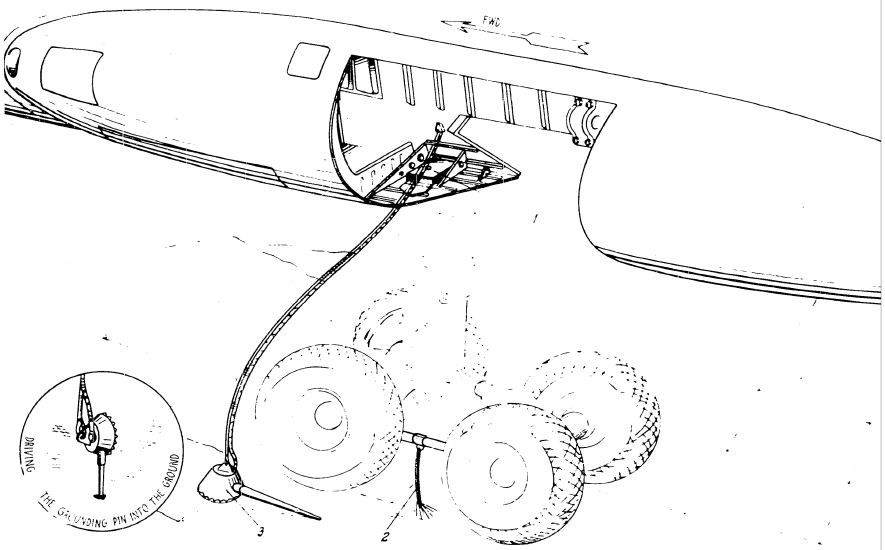

Fig. 47 Grounding pins installation.

1-grounding pin bag; 2-metal whisk; 3-grounding pin.

Declassified in Part - Sanitized Copy Approved for Release 2011/12/14 : CIA-RDP80T00246A064200070001-1

Declassified in Part - Sanitized Copy Approved for Release 2011/12/14 : CIA-RDP80T00246A064200070001-1

SECTION VI

ELECTRICAL EQUIPMENT

22. General Description

The aircraft electrical equipment provides for:

a/ engine starting both from aircraft and external power sources;

b/ power supply to engine instruments;

c/ operation of engine fuel and oil system accessories;

d/ control of hydraulic system components;

e/ operation of remote control electrical servomechanisms;

f/ control of items of air conditioning and pressurization system;

g/ control and operation of gunnery, bombing and cargo-handling equipment;

h/ power supply to radio-communication and radar equipment;

i/ operation of warning light and audio signal systems;

j/ power supply to and control of interior and exterior lighting systems;

k/ control and operation of anti-icing and heating devices;

l/ power supply to and operation of navigational instruments;

m/ power supply to and operation of photographic equipment etc.

Electric power utilizing equipment is supplied with 28.5v d-c power, 115 v, 400 cps single-phase a-c power and 36 v, 400 cps three-phase a-c power.

D-c power sources comprise eight starter-generators model CTT-12TM and seventeen acid batteries model 12CAM-28.

A-c power is generated by four 115 v, 400 cps CTO-11 alternators and one IIO-750A inverter.

Declassified in Part - Sanitized Copy Approved for Release 2011/12/14 : CIA-RDP80T00246A064200070001-1

Declassified in Part - Sanitized Copy Approved for Release 2011/12/14 : CIA-RDP80T00246A064200070001-1

The ПО-750А inverter is designed for testing some power utilizing equipment when the aircraft engines are inoperative and no external power is available, and for supplying power to essential instruments in flight in case of alternators failure.

Three-phase a-c power, 36v, 400 cps is supplied by two ПТ-500Ц inverters /one of which is a stand-by/ and one ПАЛ-1ФП inverter.

Control and supervision of all electric power sources are executed by the radio-operator.

Electric power utilizing equipment is installed in the fuselage, wing engine nacelles and tail unit, depending upon their functions. All controls for electric power utilizing equipment are located at the stations of corresponding crew members.

Location of major components of the aircraft electrical system is shown in fig. 48.

The aircraft d-c and 115v a-c power distribution systems are single-wire circuits using the aircraft structure for a ground return.

A wire numbering system consisting of a combination of letters and numbers is used to identify each wire and bunched conductor.

Electrical circuits are shielded, and filters are provided for interference elimination at radio reception. The cables are laid along the walls and ceiling of the fuselage, and along the front and rear wing spars.

Basic electrical system lay-out is shown in fig. 49.

Both sealed and unsealed standard plug connectors are used to pass the cables through manufacturing and structural joints of the aircraft, and connect them to control panels, distribution boxes, instrument panels, and items of electrical equipment. Bolted joints are provided for main lines.

Aircraft electrical distribution system is divided into separate feeders. Each feeder is protected by its circuit breaker. Circuit-

Declassified in Part - Sanitized Copy Approved for Release 2011/12/14 : CIA-RDP80T00246A064200070001-1

Declassified in Part - Sanitized Copy Approved for Release 2011/12/14 : CIA-RDP80T00246A064200070001-1

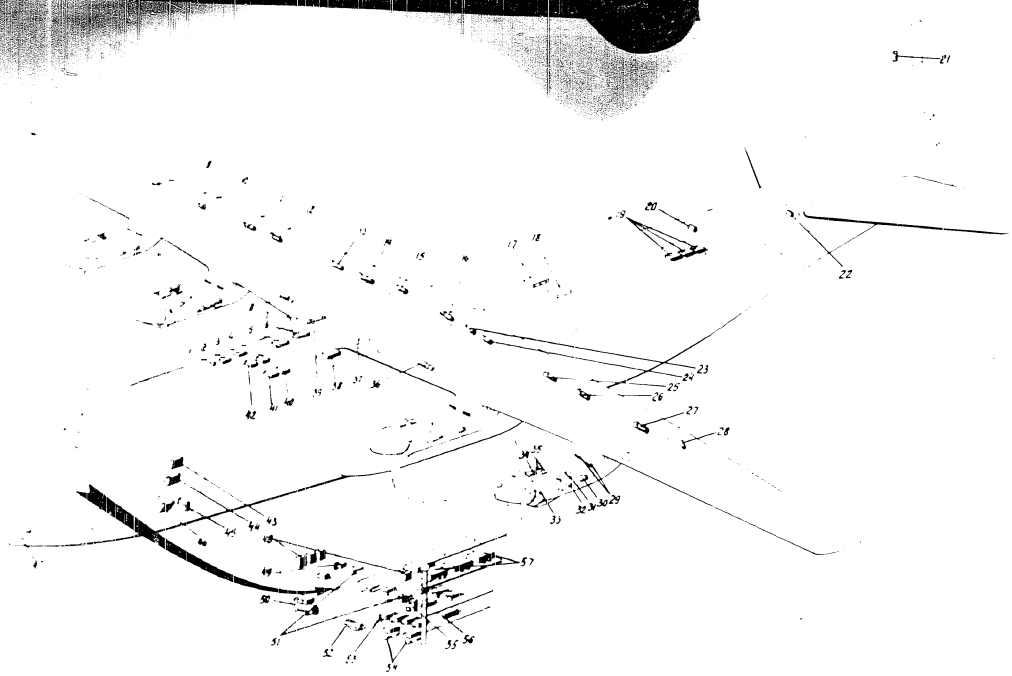

Fig. 48 [illegible]tion of major items of aircraft
[illegible]

[illegible] engine starting unit; [illegible] 4-[illegible] starter-[illegible] relays [illegible] bution [illegible] transmitter [illegible] (unit 463) for [illegible] OM [illegible] aileron [illegible] for group [illegible] tanks in the right wing; [illegible] for group [illegible] tanks in the right wing; [illegible] in the right wing; [illegible] in the right wing; [illegible] right wing; 15-fuel [illegible]

50X1-HUM

Declassified in Part - Sanitized Copy Approved for Release 2011/12/14 : CIA-RDP80T00246A064200070001-1

Declassified in Part - Sanitized Copy Approved for Release 2011/12/14 : CIA-RDP80T00246A064200070001-1

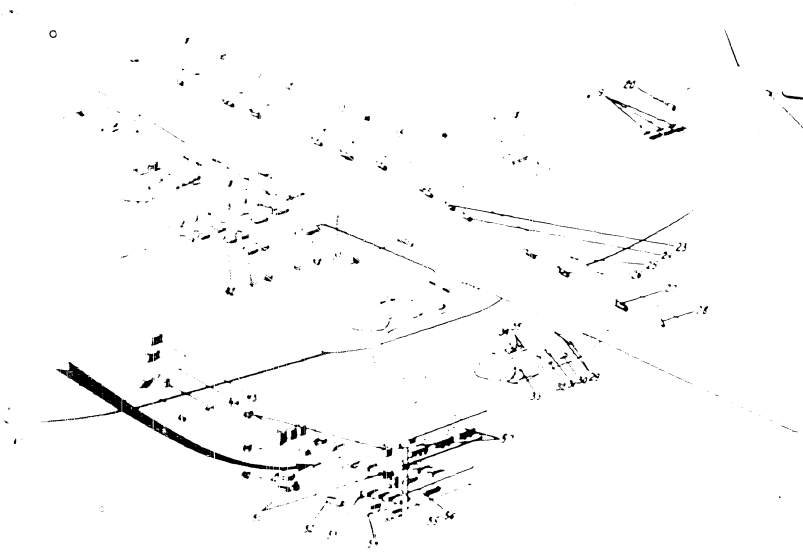

Fig. 48 [illegible] of aircraft

Declassified in Part - Sanitized Copy Approved for Release 2011/12/14 : CIA-RDP80T00246A064200070001-1

Declassified in Part - Sanitized Copy Approved for Release 2011/12/14 : CIA-RDP80T00246A064200070001-1

Declassified in Part - Sanitized Copy Approved for Release 2011/12/14 : CIA-RDP80T00246A064200070001-1

Declassified in Part - Sanitized Copy Approved for Release 2011/12/14 : CIA-RDP80T00246A064200070001-1

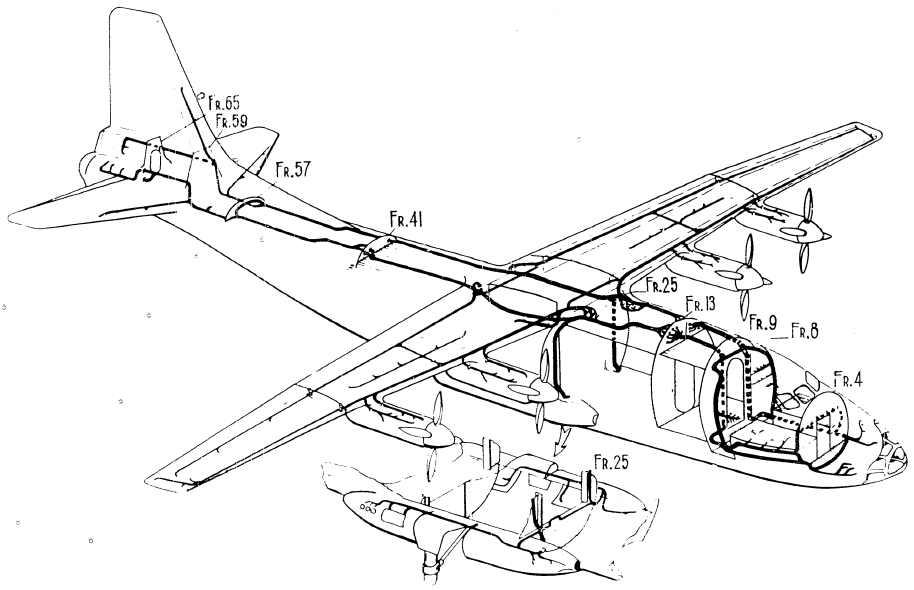

Fig. 49 [illegible]

Declassified in Part - Sanitized Copy Approved for Release 2011/12/14 : CIA-RDP80T00246A064200070001-1

Declassified in Part - Sanitized Copy Approved for Release 2011/12/14 : CIA-RDP80T00246A064200070001-1

breakers are located in distribution boxes, on control boards and panels, and are easily replaced if faulty.

Control circuits for various aircraft electric power-utilizing equipment are designed to the maximum standard of [illegible] operation, allowing at the same time transfer of essential systems [illegible] the control of the aircraft commander.

Accordingly, the electrical equipment comprises a [illegible] of switching devices /relays, contactors, selector switches [illegible] which are installed in corresponding distribution boxes [illegible] control boards, panels and consoles.

Location of main switching and distribution [illegible] fig. 50.

Items of the aircraft electrical equipment are easily [illegible] so that they can be readily replaced [illegible] necessary, without being removed from the aircraft.

23. Direct Current Power Sources

The aircraft [illegible] power supply [illegible] starter-generators and [illegible] storage batteries [illegible] starting and [illegible] power supply system comprises [illegible] with [illegible] voltage regulators, [illegible] current relay, [illegible] relay.

[illegible] Starter-Generators

Starter-generators are [illegible] completion of starting they [illegible] mode of operation [illegible] supply [illegible] power to [illegible]

Each starter-generator [illegible] turbine type [illegible]

Declassified in Part - Sanitized Copy Approved for Release 2011/12/14 : CIA-RDP80T00246A064200070001-1

Declassified in Part - Sanitized Copy Approved for Release 2011/12/14 : CIA-RDP80T00246A064200070001-1

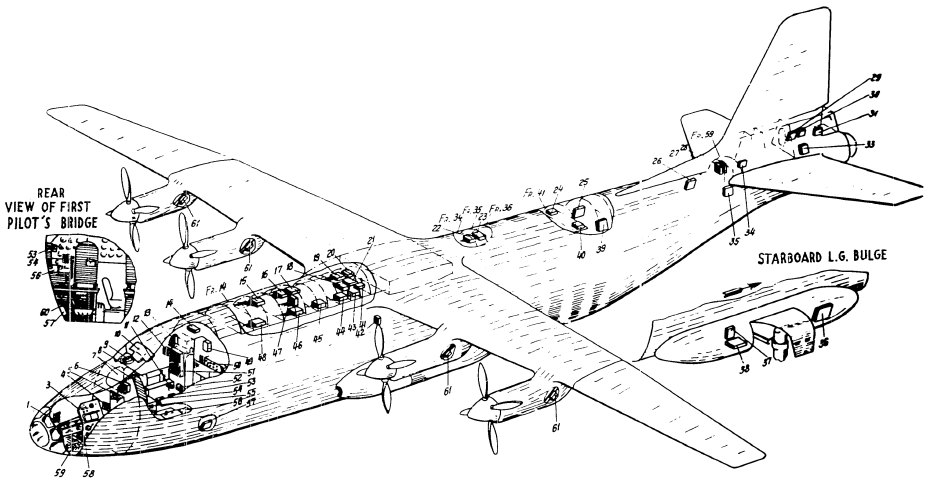

Fig. 50 Location of main switching and distributing devices

1-navigator's right console; [redacted] 3-navigator's overhead panel; 4-navigator's voltmeters panel; 5-copilot's console; 6-distribution box for APU-5 [illegible] No.1; 7-pilots' instrument panel; 8- radio operator's electric panel; 9-copilot's trim-tab panel; 10-pilots' overhead electric panel; 11-instrument panel distribution box; 12-voltmeters fuses distribution box; 13-36 v distribution box; 14-landing gear, flaps and air-conditioning and pressurization equipment distribution box; 15-propellers and spinners anti-icing system distribution box; 16-feathering system distribution box No.4; 18-cargo cabin distribution box; 19-right-hand engines distribution box; 20-ammeters fuses box; 21-emergency distribution box; 22-fuel pumps distribution box, left;

Declassified in Part - Sanitized Copy Approved for Release 2011/12/14 : CIA-RDP80T00246A064200070001-1

Declassified in Part - Sanitized Copy Approved for Release 2011/12/14 : CIA-RDP80T00246A064200070001-1

23-fuel pumps distribution box, right; 24-junction box, right; 25-terminal blocks box; 26-dual power supply distribution box; 27-box containing camera fuses; 28-tail unit anti-icing system distribution box; 29-intermittent signal system distribution box; 30-ПЭРВ-45 relay distribution box; 31-gunner's electric panel; [redacted] 33-aft cabin distribution box; 34-junction box, left; 35-dual power supply distribution box; 36-fueling system electric panel; 37-external service panel; 38-batteries and external power supply contactors distribution box; 39-cargo drop distribution box; 40-junction box, left; 41-left-hand engines distribution box; 42-cargo cabin lighting distribution box; 43-feathering system distribution box No.1; 44-starting system distribution box; 45-feathering system distribution box No.2; 46-fire-extinguishing system distribution box; 47-propeller braking distribution box; 48-flashing light signal system distribution box; 49-pilot's distribution box; 50-115v distribution box; 51-circuit breakers panel; 52-radio operator's distribution box; 53-navigational lights panel; 54-copilot's trim-tab panel; 55-ПР-2 distribution box; 56 copilot's console; 57-landing gear doors distribution box; 58-navigator's instrument panel; 59-cargo drop panel; 60-fire-extinguishing system test circuit panel; 61-box containing fuses for ДМР-400Д differential reverse-current relays.

Declassified in Part - Sanitized Copy Approved for Release 2011/12/14 : CIA-RDP80T00246A064200070001-1

Declassified in Part - Sanitized Copy Approved for Release 2011/12/14 : CIA-RDP80T00246A064200070001-1

provide cooling air to the starter-generator during operation on the ground when no ram air is available.

Voltage regulator model PH-180, series II

The PH-180 voltage regulator automatically maintains voltage of the d-c starter-generators in prescribed limits as their load changes in generator mode of operation and rpm vary within the operating range. At the same time the regulator provides proper distribution of load when the generators are operating in parallel.

The PH-180 unit is an electromagnetic regulator of the rheostat type permitting a continuous variation of the carbon pile resistance.

The PH-180 voltage regulator consists of:

- operating coil
- temperature compensator for the resistance and winding
- equaliser resistance
- equaliser winding for parallel operation.

Generator voltage may be readjusted in the aircraft only by use of BC-20 outlying resistance which is located on the radio-operator's panel.

A3II-8M relay for overvoltage protection

The A3II-8M relay serves to protect the d-c system from overvoltage due to overexcitation of any of d-c generators operating in parallel in a system with storage battery. If generator voltage exceeds 29-33 V, the excitation of the generator is automatically cut off. The generator may be reset by pressing a button on the A3II-8M relay cover.

Declassified in Part - Sanitized Copy Approved for Release 2011/12/14 : CIA-RDP80T00246A064200070001-1

Declassified in Part - Sanitized Copy Approved for Release 2011/12/14 : CIA-RDP80T00246A064200070001-1

ДМР-400Д differential reverse current relay and starter-generator circuit diagram[x]

The ДМР-400Д differential reverse current relay is designed to connect the generator to the aircraft distribution system /with the generator switch in the "ON" position/ when generator voltage exceeds distribution system voltage, and to disconnect the generator from the distribution system at a fixed reverse current. The ДМР-400Д relay serves also for manual switching on and off the generators.

ДМР-400Д relays of СТГ-12ТМ starter-generators Nos 1,2,3,4 are installed in the distribution box of the left hand engines; ДМР-400Д relays of СТГ-12ТМ starter-generators Nos 5,6,7,8 are installed in the distribution box of the right hand engines. When the switch /it.9/ is closed, power is supplied to the ДМР-400Д relay which will connect the generator to the aircraft distribution system if generator voltage exceeds distribution system voltage by [illegible] v.

The ТКЕ-21ПД relay /it.4[illegible]/ and the СП-1 fuse /it.45/6 for generator No.8/ are designed to disconnect the ДМР-400Д relay in case when the ПП-600 fuse is burnt out on the generator plus wire breaks somewhere between the plus terminal of the generator and the ПП-600 fuse.

Generator voltage is controlled by a [illegible] voltmeter [illegible] with a [illegible]-46 ten-position switch /it.46/. Right positions of the switch are used to measure generators voltage; two positions serve to measure voltage in left and right generator buses.

The voltmeter and switch are installed on the radio-operator's electrical control panel.

Generator switching-on circuits are protected against shorting on voltage control circuits by СП-1 fuses /it.4[illegible]/ located [illegible] distri-

---

x. For item numbers pointed out in this description refer to aircraft wiring data.

Declassified in Part - Sanitized Copy Approved for Release 2011/12/14 : CIA-RDP80T00246A064200070001-1

Declassified in Part - Sanitized Copy Approved for Release 2011/12/14 : CIA-RDP80T00246A064200070001-1

bution box of voltmeter fuses.

To prevent the starter-generators, in starting mode of operation, from being connected to the aricraft distribution system, the switching-on circuit of the ДМР-400Д differential reverse current relay is automatically switched off. In addition, an interlock relay /it.50 for generator No.1/ is provided which switches-off the generator when external power supply is connected.

All СТГ-12ТМ starter-generators in generator mode of operation are divided into two groups. Each group supplies power to a definite number of electric power utilizing equipment items. Left generators /Nos 1,3, 5,7/ of all engines are connected to the left feeding bus, right generators /Nos 2,4,6,8/ - to the right feeding bus. The busses of the left and right generators have no electrical connection with each other so that the generators of each group operate in parallel to supply power to the bus common for the given group of the generators.

As a provision for parallel operation of the generators, БС-1200 ballast resistances are connected to the negative wire of each generator. Voltage drop across the terminals of these resistances is proportional to load current of the generators in parallel operation. The difference in voltage drop at the ballast resistances is sensed and used for the automatic equalization of the generator voltages by the action of equalizing coils of the РН-180 carbon pile voltage regulator.

12САМ-28 Storage Battery

D-c power is provided also by 17 drycharged lead-acid storage batteries, model 12-САМ-18, of 28 amp.-hr. capacity.

The aircraft storage batteries are used to supply power to:

a/ starters and starting equipment - for independent starting of the АИ-20 engines;

b/ essential items indispensable for flight /fed from the emergency bus system/ - in case of generators failure;

Declassified in Part - Sanitized Copy Approved for Release 2011/12/14 : CIA-RDP80T00246A064200070001-1

Declassified in Part - Sanitized Copy Approved for Release 2011/12/14 : CIA-RDP80T00246A064200070001-1

c/ items of electrical equipment operated on the ground /for lighting, testing and checking-out low-power equipment, preflight and afterflight inspection/ - if no external power supply is available;

d/ radio sets - in case of emergency landing.

Seven batteries placed on trays are mounted in the rear part of the right landing gear bulge, in separate compartments providing easy access for removal, installation, and inspection.

Ten batteries are enclosed in two containers /five batteries in each/ and installed in the rear luggage compartment between Frs. Nos. 35 and 37. The batteries placed on trays are connected through a plug-socket connector, and the batteries enclosed in the containers - through busses and cables.

Heating elements are provided for electrical warming the batteries and maintaining a constant temperature in battery compartments and containers; in addition, the walls of the compartments are lined with ПХВ-1 foam plastics, and the containers shielded with felt. The battery heating switch is located on the radio-operator's electric control panel. At any considerable rise in temperature the battery heating system is automatically de-energized by ТД-115А-6К thermo-switches installed on heating elements.

Ventlines are provided in the battery compartments and containers for venting overboard the gases formed in the process of battery discharge.

9-c External Power Supply

Two d-c external power plug connectors model ШРАП-500 are installed in the right landing gear bulge in its rear part.

The ШРАП-500 connector consists of a plug attached to the aircraft structure and a detachable socket-and-cable assembly /two are provided with each aircraft individual set/.

Declassified in Part - Sanitized Copy Approved for Release 2011/12/14 : CIA-RDP80T00246A064200070001-1

Declassified in Part - Sanitized Copy Approved for Release 2011/12/14 : CIA-RDP80T00246A064200070001-1

For engine starting operation both external power sockets should be connected to independent 24 ÷ 25.5 v d-c power sources. The external service bus (for fueling, lighting the landing gear wells or supplying power to portable lamp sockets) is energized by the use of external power connector No.1, with the "Ground-Aircraft" switch in the "Off" position. In all other cases any of the two external power connectors may be used, with the "Ground-Aircraft" switch on the radio-operator's electrical control panel placed in the "GROUND" position.

Storage Battery and External Power Supply Circuits

The aircraft storage batteries and external power supply circuits provide for:

a) the simultaneous switching on (from the radio-operator's station) of 17 batteries for supplying power to the aircraft distribution system and recharging the batteries from running generators;

b) simultaneous connection (from the first pilot's or radio-operator's station) of the batteries to the emergency bus to supply the essential electric power-utilizing units, when the generators fail or are inoperative;

c) switching-on the batteries for engine starting, 16 batteries being connected to the starting bus to energize the starters, and one battery - connected to the aircraft distribution system to avoid a voltage drop at starting, which could affect the functioning of starting system control equipment;

d) averting the connection of the batteries and an external power source to the aircraft distribution system having incorrect polarity;

e) prevention of simultaneous connection of the batteries and an external power source to the aircraft distribution system;

f) separate "External power on" light indication for each external power supply connector (indicator lights installed on the radio-

Declassified in Part - Sanitized Copy Approved for Release 2011/12/14 : CIA-RDP80T00246A064200070001-1

Declassified in Part - Sanitized Copy Approved for Release 2011/12/14 : CIA-RDP80T00246A064200070001-1

For engine starting operation both external power sockets should be connected to independent 24 ÷ 25.5 v d-c power sources. The external service bus (for fuelling, lighting the landing gear wells or supplying power to portable lamp sockets) is energized by the use of external power connector No.1, with the "Ground-Aircraft" switch in the "Off" position. In all other cases any of the two external power connectors may be used, with the "Ground-Aircraft" switch on the radio-operator's electrical control panel placed in the "GROUND" position.

Storage Battery and External Power Supply Circuits

The aircraft storage batteries and external power supply circuits provide for:

a) the simultaneous switching on (from the radio-operator's station) of 17 batteries for supplying power to the aircraft distribution system and recharging the batteries from running generators;

b) simultaneous connection (from the first pilot's or radio-operator's station) of the batteries to the emergency bus to supply the essential electric power-utilizing units, when the generators fail or are inoperative;

c) switching-on the batteries for engine starting, 16 batteries being connected to the starting bus to energize the starters, and one battery - connected to the aircraft distribution system to avoid a voltage drop at starting, which could affect the functioning of starting system control equipment;

d) averting the connection of the batteries and an external power source to the aircraft distribution system having incorrect polarity;

e) prevention of simultaneous connection of the batteries and an external power source to the aircraft distribution system;

f) separate "External power on" light indication for each external power supply connector (indicator lights installed on the radio-

Declassified in Part - Sanitized Copy Approved for Release 2011/12/14 : CIA-RDP80T00246A064200070001-1

Declassified in Part - Sanitized Copy Approved for Release 2011/12/14 : CIA-RDP80T00246A064200070001-1

operator's panel and on the skin of the right landing gear bulge);

g) prevention of simultaneous connection of the CTT-12TM generators and an external power source to the aircraft distribution system.

For connecting the batteries to the aircraft distribution system or recharging them from running generators, the switch (it.5) is placed in the "Aircraft" [redacted] position. The negative side of the battery is then connected through normally closed contacts of the polarity-directional relays (it.7, 6726, 6725) to the KM-600Д power contactor coils (it. 10, 11, 12, 13, 1460, 6722, 6724) /if polarity is incorrect, the relays will be opened/. The power contactors operate to connect the batteries to the right-generator bus through the TM-600 fuse (it.4166). No fuse is provided for battery No.7.

For emergency disconnection of the batteries from the aircraft distribution system the emergency switch (it.6) is placed in the "OFF" position. This will open the negative circuit of the battery contactor coils and result in disconnecting the batteries.

For energizing the items powered from the emergency bus, the combined switch (it. 2, 4841 or it. 3, 4842) should be turned to "ON". This will actuate the KM-600Д contactor (it.20) and result in supplying power to the emergency bus.

For starting the engines from the aircraft batteries the switch (it.4168) located on the starting panel is turned on. This actuates the contactors (it. 4164 and 4165), causing the contactor (it.4164) to disconnect 16 batteries from the aircraft distribution system. Then the starting button is pressed to connect the 16 batteries to the starting bus (the 17-th battery will go on supplying power to the aircraft distribution system). On starting one of the engines and connecting its generators to the aircraft distribution system, the generators of the operating engine are switched on for parallel operation with batteries to effect starting other engines.

Declassified in Part - Sanitized Copy Approved for Release 2011/12/14 : CIA-RDP80T00246A064200070001-1

Declassified in Part - Sanitized Copy Approved for Release 2011/12/14 : CIA-RDP80T00246A064200070001-1

For d-c external power supply through the Nos 1 and 2 external power connectors the switch (it.5) should be placed in "Ground" [redacted] position. With external power available this will result in energizing the coils of the control relay (it.19 for connector No.1 and it. 18 for connector No.2). The relays will operate to connect (through the normally closed contacts 1-2 of the polarity-directional relay) the negative side of the external power connectors to the KW-600Д contactor (it.9) and the signal lights (it. 4225, 4838, 4226, 4840). External power will then be supplied to the right generator bus feeding the aircraft distribution system.

24. D-C Power Distribution System

The aircraft is equipped with an automatic dual d-c power supply system. If aircraft generators fail in flight, items essential for flight may be cut-off from other power-consuming units and connected to a separate circuit (emergency bus) fed from the batteries.

Left and right generators furnish power for separate left and right generator busses in engine distribution boxes. The engine distribution boxes are the main distribution devices of the dual d-c power supply system.

Left and right generator busses distribute power via protective devices to group distribution networks feeding cabins or separate systems. Each group distribution network has a dual-supply contactor model "KTT" and a protective apparatus for certain electric power utilizing items. The dual-supply contactor is electrically connected with the busses of both generator groups.

The contactor control winding is permanently connected to one of the feeder busses, so that the items related to a given group are normally fed either from left or right generators, depending upon the feeder bus to which the contactor control winding is connected.

Declassified in Part - Sanitized Copy Approved for Release 2011/12/14 : CIA-RDP80T00246A064200070001-1

Declassified in Part - Sanitized Copy Approved for Release 2011/12/14 : CIA-RDP80T00246A064200070001-1

[illegible] the feeder bus is [illegible] power circuit [illegible] supply contactor control winding will be [illegible] off, [illegible] contactor will transfer the [illegible] power-consuming [illegible] [illegible].

Therefore, during normal operation of the [illegible] electric power are divided into two [illegible] generators, the other [illegible] the right [illegible].

[illegible] location of the group [illegible] [illegible] refer to fig. 50.

[illegible] aircraft distribution circuit voltage is [illegible] by the [illegible] instalied at the navigator's, pilot's [illegible] radio-operator's [illegible].

25. [illegible] 36v, [illegible] cps power System

The aircraft is equipped with two ПТ-500Ц inverters and one ПАГ-1ФП inverter which supply 36 v, [illegible] cps a-c power to gyro instruments.

One of the ПТ-500Ц inverters is intended for normal power supply, [illegible] other is a stand-by. The ПАГ-1ФП inverter supplies power only to the pilot's АГБ-2 stand-by attitude indicator and its [illegible] correction cut-out switch.

A provision is made for manual or automatic transfer of the 36 v, [illegible] cps supply system to the stand-by inverter in case of main ПТ-500Ц inverter failure.

Manual transfer is accomplished by the use of "Main-Stand-by" [redacted] switch installed on the radio-operator's a-c control panel; automatic transfer is by a [illegible] switching box.

System Operation

The main inverter is cut in by means of the "Main-Stand-by" [redacted] switch on the radio-operator's electrical

Declassified in Part - Sanitized Copy Approved for Release 2011/12/14 : CIA-RDP80T00246A064200070001-1

Declassified in Part - Sanitized Copy Approved for Release 2011/12/14 : CIA-RDP80T00246A064200070001-1

[illegible] panel.

[illegible] the switch in the "Main" [redacted] position the negative [illegible] of the aircraft distribution system is connected to the coil of the [illegible]-contactor located inside the ПТ-500Ц inverter (it. 26[illegible]). The [illegible]tactor operates to connect the system to the d-c motor of the ПТ-500Ц inverter.

Alternating three-phase voltage generated by the inverter is [illegible] through normally closed contacts of the relay (it. [illegible]) to [illegible] in 36 v distribution box feeding the items operating on three-[illegible] a-c power.

Besides, a-c voltage is applied to the [illegible] switch box.

If the a-c line is faulty, the [illegible] switch box will generate a signal commanding the transfer to the stand-by inverter [illegible] to an indicator light and the main-stand-by inverter transfer relay.

The [illegible] switch box provides for one-way automatic transfer of [illegible] v [illegible] cps a-c power operated items from the main to stand-by inverter only.

ПАГ-1ФП Inverter

The ПАГ-1ФП inverter is designed for [illegible] of 36 v [illegible] cps a-c power to the copilot's АГБ-2 stand-by [illegible] and to the attitude indicator's correction [illegible].

26. A-C 115 v [illegible] cps Power Supply

The aircraft is equipped with four alternators model [illegible], one on each engine, supplying 115 v, [illegible] cps a-c power to electric power utilizing items.

In addition [illegible]-750[illegible] inverter is installed as a stand-by a-c power source.

For connecting external a-c power source on the ground the aircraft is equipped with an external a-c power plug-connector model

Declassified in Part - Sanitized Copy Approved for Release 2011/12/14 : CIA-RDP80T00246A064200070001-1

Declassified in Part - Sanitized Copy Approved for Release 2011/12/14 : CIA-RDP80T00246A064200070001-1

ШРА-200ЛК located on the starboard landing gear bulge.

All a-c power-operated items are divided into four groups, each group drawing power from a separate СГО-12 alternator.

- the first group, normally receiving power from СГО-12 alternator No. 1, comprises an anti-icing system for propellers and spinners of engines Nos. 1 and 3; if alternator No. 1 fails the anti-icing system circuitry is transfered to alternator No. 4;

- the second group, normally receiving power from СГО-12 alternator No. 2 comprises an anti-icing system for propellers and spinners of engines Nos. 2 and 4; if alternator No. 2 fails the anti-icing system circuitry is transfered to alternator No. 3;

- the third group comprises auxiliary items of electrical and radio equipment operating on 115 v, 400 cps a-c power; these items draw power from bus No. 2 which is normally fed from СГО-12 alternator No. 3; if alternator No. 3 fails bus No. 2 is transfered to alternator No. 2;

The fourth group comprises the most essential items of electrical and radio equipment operating on 115 v, 400 cps a-c power; these items draw power from bus No. 1 which is normally fed from СГО-12 alternator No. 4; if alternator No. 4 fails, bus No. 1 is transfered to alternator No. 1; if СГО-12 alternators Nos. 1 and 4 fail simultaneously bus No. 1 is supplied from СГО-12 alternator No. 3 which is disconnected from bus No. 2. In this case the power consumers supplied from bus No. 2 are deenergized. Besides, when checking on the ground [redacted] bus No. 1 may receive power from the ПО-750А inverter. To do this set the ПО-750А inverter control switch located on the radio navigator's switch panel in the "Test" position. When setting the ПО-750А control switch in the "Emergency" position

Declassified in Part - Sanitized Copy Approved for Release 2011/12/14 : CIA-RDP80T00246A064200070001-1

Declassified in Part - Sanitized Copy Approved for Release 2011/12/14 : CIA-RDP80T00246A064200070001-1

the inverter is connected to supply the following consumers: the automatic, measuring and fueling units of the СЭТС-260П fuel contents gauge, АРК-5 ADF No. 1 and РСНУ-4П radio No. 2. The [illegible] power consumers of this bus No. 1 are not supplied from the [illegible] inverter.

When an external a-c power source is connected to the aircraft, power is supplied to busses Nos. 1 and 2 only.

The following equipment is necessary for normal operation of the alternator in a single-phase circuit:

- [illegible]П-1А starting and protection box;
- [illegible]-1 fine adjustment box;
- [illegible]-600 voltage regulators;
- ВС-33 outlying resistance;
- ПЕК-14 programming mechanism.

СГО-12 alternator [illegible]

СГО-12 alternator starting [illegible]

-generation of signal for [illegible] winding;

-generation of signal for automatic [illegible] the aircraft distribution system [illegible] minals amounts to 85 v;

-automatic disconnection of the alternator [illegible] bution system and switching-off [illegible] a-c circuit malfunctioning or when voltage across [illegible] minals drops below 35 v;

-"Alternator-off" warning light operation;

-varying the alternator field current to maintain the voltage across alternator terminals within 111.5 - 118.5 v. at [illegible] speed variations;

-adjusting alternator voltage level within ± 10 v. by the use of a ВС-33 outlying resistance.

Declassified in Part - Sanitized Copy Approved for Release 2011/12/14 : CIA-RDP80T00246A064200070001-1

Declassified in Part - Sanitized Copy Approved for Release 2011/12/14 : CIA-RDP80T00246A064200070001-1

A-C 115 v. 400 cps External Power Supply

Aircraft equipment utilizing a-c 115 v. 400 cps power is connected to busses Nos. 1 and 2 through the 115 v. distribution box and receives power on the ground through a ШРА-200ЛК external power supply plug connector located on the right landing gear bulge (it. 245).

The external power supply is switched on to the aircraft distribution system by means of an АЗС-2 circuit breaker (it.1730).

With the АЗС-2 circuit breaker closed and external power applied, a contactor (it. 242) is actuated to open the circuit connecting busses Nos. 1 and 2 to СГО-12 alternators (through contacts 7-8; 9-10) and connect these busses to the external power source through now closed contacts Nos. 1-2 and 3-4.

Thus, external power is supplied only to busses Nos. 1 and 2. No external power is directed to the anti-icing system of propellers and spinners.

27. Starting System for АИ-20 engines.

Starting the АИ-20 engines on the aircraft is accomplished by the use of СТГ-12ТМ starter-generators installed by two on each engine and automatically transfered to generator mode of operation on completion of the starting cycle.

Electrical starting system provides for:

a) on the ground
- engine starting
- engine motoring
- simulated starting (without ignition)
- start reversal

b) in flight
- engine starting

Declassified in Part - Sanitized Copy Approved for Release 2011/12/14 : CIA-RDP80T00246A064200070001-1

Declassified in Part - Sanitized Copy Approved for Release 2011/12/14 : CIA-RDP80T00246A064200070001-1

Engine starting on the ground may be accomplished both from external and aircraft power sources.

Starting cycle is automatic and regulated in time according to engine speed.

Timing is accomplished by means of a special electrical timer providing the necessary switching of automatic starting circuits in accordance with a preset time program.

Duration of the starting cycle is 75 sec. If the engine accelerates by self-drive rpm before the starting cycle is completed, the starting equipment will be disconnected by the action of electrohydraulic switch installed on the engine.

Electrical starting system comprises:

- КПД-75 engine starting automatic control panel;
- starter-generator model ПСТ-12А starting panel;
- starting system distribution box;
- starting system electrical panel.

Electrical circuitry of the engine starting system makes a provision for prevention of engine starting with propeller ground brake on.

Starting and propeller brake systems are interlocked through the УЭК-2 electrical propeller brake control.

In addition to this, the starting system provides for:

- locking-out the ДЗТ-400Д differential reverse current relay for the engine being started;
- locking-out the inlet guide vanes heating system on inoperative engine;
- locking-out the propeller and spinner heating system for an inoperative engine;
- locking-out the starting equipment of a started engine;
- locking-out the propeller brake system for a started engine;
- prevention of starting two engines simultaneously.

All starting controls are located on a starting panel.

Declassified in Part - Sanitized Copy Approved for Release 2011/12/14 : CIA-RDP80T00246A064200070001-1

Declassified in Part - Sanitized Copy Approved for Release 2011/12/14 : CIA-RDP80T00246A064200070001-1

Engine starting on the ground may be accomplished both from external and aircraft power sources.

Starting cycle is automatic and regulated in time according to engine speed.

Timing is accomplished by means of a special electrical timing unit providing the necessary switching of automatic starting circuits in accordance with a preset time program.

Duration of the starting cycle is 75 sec. [illegible] to definite rpm before the starting cycle is [illegible] equipment will be disconnected [illegible] switch installed on the engine.

Electrical starting system [illegible]

- АПД-75 engine starting [illegible]
- starter-generator model [illegible]
- starting system distribution [illegible]
- starting system electrical [illegible].

Electrical circuitry of the [illegible] provision for prevention of engine [illegible] brake on.

Starting and propeller brake [illegible] the [illegible]3Н-2 electrical propeller brake [illegible].

In addition to this, the starting [illegible]

- locking-out the ДЖ-4[illegible]Д differential [illegible] for the engine being started;
- locking-out the inlet guide vanes heating system [illegible] engine;
- locking-out the propeller and spinner heating [illegible] inoperative engine;
- locking-out the starting equipment of a started engine.
- locking-out the propeller brake system for a started engine;
- prevention of starting the engines [illegible].

All starting controls are located on a starting panel.

Declassified in Part - Sanitized Copy Approved for Release 2011/12/14 : CIA-RDP80T00246A064200070001-1

Declassified in Part - Sanitized Copy Approved for Release 2011/12/14 : CIA-RDP80T00246A064200070001-1

Operation of Starting System

Engine starting cycle may be divided into three [illegible]

1) backlash take-up and smooth [illegible] with the engine shaft.

2) accelerating the [illegible] fuel ignition and for starting the [illegible]

3) parallel operation of the [illegible] sufficiently rapid increase of turbine [illegible] cooling.

The starting system [illegible] by order both from the [illegible] [illegible] the starter-generators [illegible] of both power sources.

[illegible] output of their starter-generator [illegible] the engines.

Starting [illegible]

[illegible]

To start the [illegible]

– to apply power, [illegible] two separate 2Ø – 2[illegible] [illegible]

– to place the "Ground-[illegible]" [redacted] the radio-operator's panel in the [illegible] [redacted] to connect RA_1 and RA_2 adjusting [illegible] regulator, which provides for [illegible] starter-generator armatures is definite [illegible]

Described below is the operation of [illegible] for the first engine. [illegible] is identical.

Declassified in Part - Sanitized Copy Approved for Release 2011/12/14 : CIA-RDP80T00246A064200070001-1

Declassified in Part - Sanitized Copy Approved for Release 2011/12/14 : CIA-RDP80T00246A064200070001-1

Starting is accomplished as follows:

- Close the first-engine ПП-45 starting switch (it.95); with the switch closed, terminal A of the ТКЭ-53ПД-relay coil (it.4586) is connected to the positive side of the aircraft distribution system; the negative wire of this relay includes a limit switch of the propeller brake МЗК-2 electrical control, so that the relay may be actuated only after propeller brake release; this ensures lockout of the starting system when the propeller brake is on.

With the relay (it.4586) energized, a starting fuel flow restrictor valve circuit is connected to the 205 kc button (it. 93), preparing the circuit for operation; at the same time the "plus" of the aircraft distribution system is applied to the green light (it.106) indicating readiness for operation.

Momentarily pressing the 205 kc starting button (it.104) results in applying the aircraft distribution system voltage to the control coil of the ТКЕ-56 ПД relay (it.4552). The relay is actuated and the aircraft distribution system voltage is supplied through the now closed contacts (18-17) to the relay (P_I) coil of the automatic starting unit. The relay (P_I) is then interlocked. The second end of the relay (P_I) coil is connected to the negative side of the aircraft distribution system through closed contacts of the ВЭ-20 electro-hydraulic switch on the engine.

The aircraft distribution system voltage passing the relay (P_I) is applied to the pilot's СЛЦ-51 green light (it.105) which goes on indicating that the АПД-75 unit has started to operate. At the same time the supply circuit of the "Ready-for-start" [redacted] indicator light is opened and the light goes out.

When the relay (P_I) is actuated, the aircraft distribution system voltage is supplied to Д-2э electromotor of the ПЭМ2-75у programming unit which starts sequencing the cycle; simultaneously

Declassified in Part - Sanitized Copy Approved for Release 2011/12/14 : CIA-RDP80T00246A064200070001-1

Declassified in Part - Sanitized Copy Approved for Release 2011/12/14 : CIA-RDP80T00246A064200070001-1

the circuit of the ЭД-18А start speed-up electromagnet is being prepared for operation.

When the relay (P_3) of the АПД-75 unit is energized, the aircraft distribution system is supplied to the control coil of the relay (it.4552), and the relay (it.4552) is interlocked.

At the same time the positive side of the aircraft distribution system is connected to:

- the СТ-600Д contactor (it.22) which connects the starting bus to the aircraft distribution system;

- the relay (it.4567) and contactor (it.2555) which connect the right and left-generators busses for parallel operation of the generators of started engines during starting subsequent engines when starting is accomplished from external power source.

Through the now closed contacts of the relay (P_3), voltage is applied to the coil of the relay (P_7) which operates.

to open the starting-button circuit, preventing the simultaneous starting of two engines.

Simultaneously with the ТКЕ-56ПД relay (it.4552) the ПЕД-9111 contactors (it.4556 and 4580) are actuated to transfer the generators Nos 1 and 2 field windings from the РН-16 voltage regulators circuits to the starting system circuitry. The field winding of the No.1 СТГ-12ТМ starter-generator is connected to the terminal 2 of the Ш-5 connector on the ПСГ-2А starter-generator panel, and the field winding of the No.2 СТГ-12ТМ starter-generator is connected to terminal 11 of the same connector.

Actuation of the ТКЕ-56ПД relay (it.4552) results in closing the following switch-gear components:

1. Through the СП-15 fuse (it.4638) of the relay (it.4552) the aircraft distribution system voltage is supplied to:

- coils of the ТКЕ-52ПД relays (it.4153 and 248) of the ДМР-400Д lockout for the engine being started;

Declassified in Part - Sanitized Copy Approved for Release 2011/12/14 : CIA-RDP80T00246A064200070001-1

Declassified in Part - Sanitized Copy Approved for Release 2011/12/14 : CIA-RDP80T00246A064200070001-1

- coils of the [illegible] (it. [illegible]) and [illegible] which [illegible] [illegible] armature coils of the No. 1 and [illegible] [illegible] the [illegible] terminals $Я_1$ and $Я_2$ correspondingly;

- the coil of the [illegible] ПД relay (it. [illegible]) [illegible] for the starting-cycle time, control coil [illegible] (it. [illegible] and 4554) of the starting [illegible] [illegible] started;

- through normally closed [illegible] ПД-[illegible] [illegible] „Ж" [illegible] [illegible] 5-6 of the relay (it. [illegible]) the aircraft distribution system voltage is supplied to:

- the coil of the [illegible] contactor (it. [illegible]) which [illegible] [illegible] the ignition system to the aircraft distribution [illegible];

- the coil of the [illegible] ПД relay (it. [illegible]) [illegible] [illegible] primary fuel valve circuits for operation.

- aircraft distribution system voltage is [illegible] [illegible] normally closed contacts of [illegible] switch to [illegible] [illegible] valve (shut-off fuel valve), which [illegible] [illegible] supply at the beginning of the starting cycle.

Once the relay ($Я_1$) is [illegible], the [illegible] system voltage is supplied to [illegible] [illegible] which connect starter-generators [illegible] through starting resistances $ЯП_1$ and $ЯП_2$.

This results in reducing the [illegible] generators; they start to operate [illegible] with a low torque, taking up backlash in [illegible] and [illegible] and quiet engagement with the engine shaft. [illegible] generator field windings are fed from the aircraft distribution [illegible].

Further operation of the starting [illegible] phases following each other [illegible] to the starting cycle program.

Declassified in Part - Sanitized Copy Approved for Release 2011/12/14 : CIA-RDP80T00246A064200070001-1

Declassified in Part - Sanitized Copy Approved for Release 2011/12/14 : CIA-RDP80T00246A064200070001-1

Time in seconds pointed out below is counted from the moment when the starting button is pressed.

In 2.5 seconds the cam "O" switch in the programming mechanism is actuated to provide for the speeding up of the starting cycle and resetting the programming mechanism in the event that the starting operation is stopped.

In 3.5 seconds the cam "A" switch in the programming mechanism is actuated to shunt starting resistances RП$_1$ and RП$_2$.

Thus, in 3.5 seconds full supply voltage (24 v) is applied to the starter-generator armatures, and the starter-generators begin to rapidly accelerate the engine shaft.

In 9 seconds the cam "B" switch in the programming mechanism is actuated; this results in:

- supplying primary fuel into the engine;
- switching-on the РУТ-600Д power regulators;

In 15 seconds the cam "Б" switch in the programming mechanism is actuated to provide for:

- switching-on the power regulators;
- transfer of the starter-generator armatures power supply to 48v.

In 20 seconds the cam "Г" switch is actuated to provide for:

- secondary (normal) fuel supply;
- repeated switching-on the РУТ-600Д power regulators.

In 25 seconds the cam "Ж" switch in the programming mechanism is actuated to open the supply circuit to the КМ-25 contactor (it.4550) and the РМ-52ПД relay (it.4551). This provides for cutting out the ignition system and the primary fuel valve.

Further deceleration of the engine shaft is accomplished by the engine running aided by the starter-generators, which results in further decreasing engine rpm and ensures accelerating the engine to idling speed.

Declassified in Part - Sanitized Copy Approved for Release 2011/12/14 : CIA-RDP80T00246A064200070001-1

Declassified in Part - Sanitized Copy Approved for Release 2011/12/14 : CIA-RDP80T00246A064200070001-1

When the engine turbine speed increases to 4500 ÷ 6400 rpm (35-50.5%), the ЭЗ-2с electrohydraulic switch on the engine will operate to open the negative circuit of АПД-75 relay (P_1); the relay (P_1) is reset, and through its now closed contacts (2-1) and closed contacts (5-6) of the relay (P_2) the positive side of the aircraft distribution system is connected to the electromagnetic coupling of the programming mechanism. Energizing the electromagnetic coupling results in reducing the gear ratio between the electromotor and programming mechanism shaft, which provides for speeding up the starting cycle and resetting the mechanism.

In normal operation of the programming mechanism, electrical components of the starting equipment are cut out in the following order:

- at the 58-th second the cam "Б" switch is reset, which results in transferring power sources from series to parallel connection;

- a second later the cam "А" switch is reset, which results in opening starter-generators supply circuit;

- still a second later (in 70 seconds from the beginning of the starting cycle) the cam "Е" switch is actuated to open the interlock circuit of the relay (P_1) in the АПД-75 unit and disconnect the РУЗ-600Д power regulators; 2.8 seconds later the cam "З" switch is reset;

- in 73 seconds switches of cams "В", "Г" and "Д" are reset; this causes no action of the switchgear since all these switches are de-energized;

- in 74 seconds the cam "Ж" switch is reset;

- the last switch is reset at the 95-th second; this is the cam "О" switch.

As the last switch is reset, the "АПД-75 in" signal light goes out and the Д-2Р electromotor is de-energized (with electric brake

Declassified in Part - Sanitized Copy Approved for Release 2011/12/14 : CIA-RDP80T00246A064200070001-1

Declassified in Part - Sanitized Copy Approved for Release 2011/12/14 : CIA-RDP80T00246A064200070001-1

applied) the programming mechanism is then ready for operation in the next starting cycle.

At the same time the interlocking circuit of the ТКЕ-56 relay (it.4552) is opened, the КМ-600 contactors (it.4549 and 4581) disconnect the starter-generator armature windings from the ПСГ-2А box, the ТКД-511А contactors (it. 4556 and 4580) transfer the starter-generator field windings to the РН-180 voltage regulator, and the ТКЕ-52ПД relay (it. 4579) is disconnected.

When voltage is applied to starter-generator terminals, now in generator mode of operation, the positive wire is connected through the СП-5 fuse (it.39, 41) and the ТКЕ-52ПД relay (it.4579) to the ТКЕ-53 relay, (it.4553) and the ТКЕ-21ПД relay (it.4554) of the starting equipment lock-out for the running engine. These relays operate to open the supply circuit of the ТКЕ-56ПД relay coil (it.4552) and to supply power to the ТКЕ-53ПД relay coil (it. 2482); when energized the ТКЕ-53ПД relay opens the coil circuit of the МЭК-2 electric propeller brake control mechanism and closes the circuits provided for the operation of the inlet guide vanes heating system and the propeller and spinner anti-icing systems.

When the starter-generators are cut off, the turbine torque is quite sufficient for accelerating the engine to idling speed owing to the automatic acceleration control.

Engine Cold Rotation

For cold rotation the engine place the В-45 switch(it.99) in "Cold Rotation" position (causing the switch contacts to open) and close the В-45 engine cut-out switch (it.2571).

Then follow the same procedure as for starting the engine.

Operating of the equipment during engine cold rotation differs from the starting cycle operation in the following:

Declassified in Part - Sanitized Copy Approved for Release 2011/12/14 : CIA-RDP80T00246A064200070001-1

Declassified in Part - Sanitized Copy Approved for Release 2011/12/14 : CIA-RDP80T00246A064200070001-1

- primary fuel ignition system is not switched on;
- the РУТ-600Д power regulators are not switched on;
- no fuel is supplied to the main fuel nozzles;
- in 25 seconds after depressing the starting button the programming-mechanism electromagnetic coupling is cut in, which results in transfering the programming mechanism to speeded-up mode of operation and finishing the starting cycle at the 30-th second.

Thus, the engine motoring procedure consists only in turning the engine shaft by means of starter-generators without ignition and fuel supply.

Simulated engine Starting

Simulated engine starting is accomplished in the way similar to engine motoring procedure except that the engine shut-off valve is left open, permitting a fuel supply to main nozzles in accordance with a pre-set starting cycle program.

Engine Start Refusal

To stop the starting procedure in case of a faulty engine accessory, it is necessary to place the engine cut-out switch in "ON" position and depress the ВК2-141Б-1 start-refusal button (it.4598) on the starting system electric panel. This will result in de-energizing interlocking circuit of the relay P_1 in the АПД unit (automatic starting control unit) and, consequently, in cutting out the starter-generators and all accessories of the engine being started; the programming mechanism is then transfered to the speeded-up mode of operation.

Ground Engine Starting from Aircraft Power Sources

Electric circuitry of the engine starting system provides for starting the engines from aircraft power sources, the first engine

Declassified in Part - Sanitized Copy Approved for Release 2011/12/14 : CIA-RDP80T00246A064200070001-1

Declassified in Part - Sanitized Copy Approved for Release 2011/12/14 : CIA-RDP80T00246A064200070001-1

being started from aircraft batteries only, and subsequent engines - from aircraft batteries aided by generators driven from the started engines.

Such a procedure ensures the most economic utilization of the aircraft batteries energy.

To start the engines from aircraft power sources, it is necessary:

- to cut in the batteries for supplying power to the aircraft distribution system;

- to cut in all the necessary electric power utilizing items and starting switchgear circuits, the same as when starting engines from external power supply sources;

to place the 2B-45 "Batteries in for starting" [redacted] switch (it. 4168), located on the starting panel, in "ON" position.

This will cause the KП-600Д contactors (it. 4165 and 4164) to actuate so that the 17-th battery will remain connected to the aircraft distribution system (right-generators bus) while other batteries will be disconnected from the aircraft distribution system and connected to the starting bus when the starting button is depressed.

After one of the engines has been started (e.g. the first engine) and accelerated to idling, it is necessary to connect the CTГ-12TM Nos 1 and 2 starter-generators to aircraft distribution system using the 2B-45 switches (it. 47 and 48). This results in energizing the ТКБ-52ПД relay (it.1858) which opens the supply circuit of the КП-600Д-contactor coils (it. 4164), de-energizes the contactor and consequently connects all 17 batteries to the aircraft distribution system.

When another engine is being started, depressing the starting button results in actuation of the КП-600Д contactor (it.2565) and ТКБ-52ПД relay (it.2567) installed on the radio operator's electric panel;

Declassified in Part - Sanitized Copy Approved for Release 2011/12/14 : CIA-RDP80T00246A064200070001-1

Declassified in Part - Sanitized Copy Approved for Release 2011/12/14 : CIA-RDP80T00246A064200070001-1

[illegible] causes the [illegible] generators [illegible] right-generators [illegible] for [illegible] [illegible] [illegible].

After [illegible] of the engines have been started, the third and the fourth engines are started with the assistance of starter-generators [illegible] starter engines, which increases the reliability of [illegible] [illegible].

To ensure reliable operation of the engines starting [illegible] starting the engines from aircraft power sources, it is [illegible] to follow the starting procedure described in [illegible] instructions for [illegible] aircraft.

28. Aircraft Fuel System

Brief Description of the Aircraft Fuel System

The aircraft fuel system is divided into [illegible] parts providing fuel supply to the starboard and port engines.

Fourteen fuel pumps (unit [illegible]) are installed in [illegible] to feed fuel to the engines from the tanks, one pump for each tank of the groups I, II, III, IV, V, and two pumps for each tank of the group VI. The pumps are driven by [illegible] electromotors.

The sequence of fuel consumption can be controlled automatically or manually, as desired by the pilot.

Fuel System Electric Circuit

The fuel system electric circuit provides for:

- automatic or manual control of single-point fuelling;
- indication of the fuelling valves position;
- indication of fuel tank groups being full;

Declassified in Part - Sanitized Copy Approved for Release 2011/12/14 : CIA-RDP80T00246A064200070001-1

Declassified in Part - Sanitized Copy Approved for Release 2011/12/14 : CIA-RDP80T00246A064200070001-1

- automatic or manual control of the sequence of fuel consumption from various tank groups;

- indication of sequence of fuel consumption;

- warning of fuel remaining for 60 and 15 minutes' flight;

- signalling the presence of pressure downstream of operating fuel pumps;

- measuring the fuel quantity both for each group of tanks and the sum of fuel quantity for each wing separately.

Automatic fuelling and fuel transfer sequence control, indication of fuelling and consumption sequence, warning of fuel remaining for 60 and 15 minutes' flight, as well as measuring fuel quantity in the tanks are accomplished by the СЭТС-260В fuel gauge.

The СЭТС-260В fuel gauge comprises:

- 12 capacitor-probes with transmitters;

- one БА-52-23 fuelling unit;

- two БА-52-22 automatic control units;

- two УТС-52-18 measuring units;

- one ПГ-8 selector switch;

- one ПД2-1 remote switch;

- one УТД-52 indicator.

The fuel level capacitor-probes are installed in the main tanks of each group (tanks Nos 2, 3, 4, 5, 7, 9).

Single-point fuelling controls are located on the panel installed in the front section of the starboard landing gear fairing.

Fuel consumption sequence controls are located on the fuel panel installed in the pilot's central instrument panel.

The electric circuit of the fuel control system operates on d-c and a-c power from the corresponding aircraft distribution systems.

Declassified in Part - Sanitized Copy Approved for Release 2011/12/14 : CIA-RDP80T00246A064200070001-1

Declassified in Part - Sanitized Copy Approved for Release 2011/12/14 : CIA-RDP80T00246A064200070001-1

Operation of the Electric Circuit of the Fuel Control System

Automatic control of the sequence of fuel consumption, fuelling control, and warning of the quantity of fuel remaining is accomplished through a-c bridges, one arm of which is an L_1 inductance coil of the float induction transmitter installed in the fuel quantity probe.

There are three transmitter induction coils in each probe (except the probe in the group I fuel tanks). The transmitters are divided into the top, middle and the bottom ones, according to their position.

Each of the probes installed in the group I fuel tanks (tanks No.2) is provided with two transmitters only - the top and the bottom ones.

When filling the fuel tanks, or during consumption of fuel each transmitter controls the following circuits:

- the top transmitter indicates that the tanks of a certain group are full, and controls the filling valves of its group and the subsequent group (the valve of the filled group closes, and the valve of the subsequent group opens) during automatically controlled fuelling;

- the middle transmitter generates signals for switching off the fuel pumps of the preceding group of tanks;

- the bottom transmitter controls switching fuel pumps of its group of tanks to speed-up operation (except pumps of the group V tanks) providing for consumption of the fuel remaining in the tanks of this group, - switching the fuel pumps of the subsequent group of tanks to normal operation, and duplicates switching off the pumps of the preceding group; besides that the bottom transmitter generates signals for illuminating the fuel transfer sequence indicator lights.

Single-point fuelling automatic control

Automatic single-point fuelling control system provides for fil-

Declassified in Part - Sanitized Copy Approved for Release 2011/12/14 : CIA-RDP80T00246A064200070001-1

Declassified in Part - Sanitized Copy Approved for Release 2011/12/14 : CIA-RDP80T00246A064200070001-1

ling the right and left wing tanks with fuel through the fuelling adaptor installed in the front section of the landing gear fairing. The sequence of automatic fuelling is opposite to that of fuel consumption, i.e. tanks of group VI are filled first, the next being tanks of groups V, IV, III, II and I.

Power for the single-point fuelling system is supplied from the d-c power distribution system (external service bus), and from the 115 v 400 cps a-c power distribution system.

Single-point fuelling of the right and left wing tanks groups is accomplished simultaneously.

Let us consider operation of the left wing automatic fuelling circuit.

For automatic operation of the system the B-45 fuelling control switch (it. 431) should be placed in the "Automatic" [redacted] position. This energizes the ТКЕ-56 ПД relay (it.323) preparing the control circuits of the filling valve М3К-3 electric mechanism for automatic operation, and the М3К-3 electric mechanism of the group V filling valve (it.425) starts operating. The blue "Valve shut" indicator light (it.435) will go out. The valve will open fully in 8 to 13 seconds, and the М3К-3 electric mechanism will generate a signal for switching the group V unit 436 pump (it.456) to normal operation.

In case fuel pressure in the filling line exceeds 0.15 kg/cm^2, which is indicated by the green "Fuel supplied" [redacted] indicator light (it.442), fuel flowing from the fueller in the group V tanks will be transfered from these tanks to the tanks of group VI.

The group VI tanks being filled, the top transmitter (it.1631) of the No.4 tanks is actuated and generates a signal for cutting off the group V fuel pump. The pump is switched off, and fuelling of the group VI tanks ceases.

Declassified in Part - Sanitized Copy Approved for Release 2011/12/14 : CIA-RDP80T00246A064200070001-1

Declassified in Part - Sanitized Copy Approved for Release 2011/12/14 : CIA-RDP80T00246A064200070001-1

When the group V tanks are filled, the top transmitter (it.394) of the No.9 tanks is actuated and sends out a signal to the yellow indicator light (it.429) indicating that the group V tanks are full, and to the winding of the group V fuel valve M3K-3 electromotor (it.425) which initiates closing of the valve.

The valve shut, the M3K-3 electric mechanism (it.426) limit switch will cut off power supply to the electric mechanism motor winding and connect the negative side to the blue "Valve shut" indicator light (it.435).

When the group V filling valve starts to close, power is applied to terminal 5 of the M3K-3 electric mechanism (it.424) which initiates opening the group IV tanks filling valve. The "Valve shut" blue indicator light (it. 420) will go out.

When the group IV fuel tanks are filled, the top transmitter (it.395) of the No.7 tanks is actuated and sends out a signal to the "Group IV fuel tanks filled" yellow indicator light (it.421) and to the M3K-3 electric mechanism motor winding (it.424) which initiates closing the group IV filling valve. At the same time power will be applied to the winding of the M3K-3 electric mechanism (it.498), and the filling valve of the group III tanks will start opening. The shutting of the group IV filling valve is indicated by a CIII-51 blue indicator light (it.420).

Further operation of the automatic fuelling circuit is similar to that presented above.

All fuel tanks groups filled, ten yellow "Group filled" indicator lights and ten blue "Valve shut" indicator lights on the control panel will be illuminated. The fuelling procedure will be over, and all circuit breakers and switches on the panel should be opened.

Declassified in Part - Sanitized Copy Approved for Release 2011/12/14 : CIA-RDP80T00246A064200070001-1

Declassified in Part - Sanitized Copy Approved for Release 2011/12/14 : CIA-RDP80T00246A064200070001-1

Single-point fuelling with manual control

In case fuelling is controlled manually, the [illegible] opened by placing the ПН-45М switch in the upper position for about 15 sec., which ensures full opening of the valve. The valve [illegible] closed automatically by the top transmitters, which prevents over-filling of the tanks.

The filling of fuel tank group [illegible] indicated, as during automatic control, with [illegible] cator lights actuated by the top transmitters.

With manual control, the [illegible] groups is arbitrary, allowing si[illegible]

In case the pressure in the [illegible] cm², the ЭД-24А pressure switch (it.263[illegible]) [illegible] pressure" [redacted] on.

Automatic control of [illegible]

Automatic control of fuel [illegible] groups of fuel tanks except the [illegible]

Automatic control of fuel transfer [illegible] the fuel pumps of respective tank [illegible] sequence of operation, transfering [illegible] operation, switching out the pumps of [illegible] tanks [illegible] of the system operating conditions, [illegible] of fuel remaining for 60 minutes' and 15 minutes' flight. Automatic control of the sequence of fuel transfer involves operation of the bottom and middle transmitters and the БА-52-22 automatic control units. To ensure reliability of control, the outputs of both automatic control units are connected in parallel. Thus, in case one of the units fails, automatic control of the entire system is provided for by the other unit.

Declassified in Part - Sanitized Copy Approved for Release 2011/12/14 : CIA-RDP80T00246A064200070001-1

Declassified in Part - Sanitized Copy Approved for Release 2011/12/14 : CIA-RDP80T00246A064200070001-1

Besides providing preprogrammed transfer sequence, the system allows automatic refuelling of the group VI tanks when the tanks of group V are emptied. Thus, the group VI tanks will always be filled by the time the fuel is consumed, and the "fuel remaining for ... minutes' flight" warning light will indicate the true quantity of fuel remaining.

Fuel pumps of groups I, II, III, and IV operate at normal and speed-up operation. Fuel pumps of group V tanks operate at normal rating only. The group VI pumps operate at normal rating. The pilot may manually switch these pumps over to speed-up operation after the group V tanks are emptied or in case of an emergency.

All fuel pumps are remote controlled. Operation of the pumps is initiated by EM-501 contactors installed in the left and right distribution boxes of the fuel pumps.

The automatic control units are switched on by ZIM-3 switches (it.401 and 367) installed on the fuel control panel. The switches placed in the "ON" position supply power to the automatic control units, which is indicated by a blue indicator light marked "ON" (it.454) on the fuel control panel. For automatic control of the fuel transfer sequence it is necessary to place the [redacted] switch (it.455) on the fuel control panel in the "Automatic" position. This will connect fuel pump control circuits to the outputs of the automatic control units which send out signals for switching on the pumps of the first-group tanks.

As the fuel from the group I tanks is consumed, the bottom transmitters in the quantity probes of No.2 fuel tanks are actuated sending out the following signals:

- for illuminating the indicator light marked "2";
- for switching on fuel pumps of the group II tanks;
- for transferring fuel pumps of the first group tanks to speed-up operation.

Declassified in Part - Sanitized Copy Approved for Release 2011/12/14 : CIA-RDP80T00246A064200070001-1

Declassified in Part - Sanitized Copy Approved for Release 2011/12/14 : CIA-RDP80T00246A064200070001-1

When a certain amount of fuel is consumed from the group II tanks (the residual amount being 850 ± 50 l), the middle transmitters of the No.3 tanks are actuated to switch off the group I fuel pumps (it.472 and 295).

As the fuel from the group II tanks is consumed, the bottom transmitters of the No.3 tanks are actuated. At the same time

- the blue indicator light marked "3" (it.1632) comes on;
- the signal for shutting off fuel pumps of the group I tanks is repeated;
- the fuel pumps (it.1628 and 1636) of the group III tanks are switched on for normal operation;
- the fuel pumps of the group II tanks are switched over to speed-up operation.

After the group II fuel tanks are emptied, fuel is transferred from the group III tanks. When there remains 1100 ± 50 l. of fuel in each of the group III tanks, the middle transmitters of the probes in No.5 tanks (it.395 and 371) are actuated to switch off the fuel pumps of the group II tanks (it.459 and 295).

As the fuel from the group III tanks is consumed, the bottom transmitters of the probes in the No.5 tanks (it.395 and 371) are actuated. At the same time

- the blue indicator light marked "4" (it.1634) comes on;
- the signal for switching off the fuel pumps of the group II tanks is repeated;
- the fuel pumps (it.459 and 307) of the group IV tanks are switched on for normal operation;
- the group III pumps (it.1628 and 1638) are switched over to speed-up operation.

The middle transmitters of the probes in the No.7 tanks (it.395 and 307) are actuated, the group III fuel pumps (it.1628 and 1636) are switched off.

Declassified in Part - Sanitized Copy Approved for Release 2011/12/14 : CIA-RDP80T00246A064200070001-1

Declassified in Part - Sanitized Copy Approved for Release 2011/12/14 : CIA-RDP80T00246A064200070001-1

As the fuel from the group IV tanks is consumed the bottom transmitters of the probes in the No. 7 tanks (it.395 and 372) are actuated and then:

- the blue indicator light marked "5" (it.381) comes on;
- the signal for switching off the group III fuel tanks is repeated;
- the group V fuel pumps (it. 456 and 310) are switched on for normal operation;
- the group IV fuel pumps (it. 459 and 307) are switched over to speed-up operation.

After the group IV fuel tanks are emptied, fuel is transferred from group V tanks. The middle transmitters of the probes in No.9 tanks (it. 394 and 373) actuated, the group IV fuel pumps (it. 459 and 307) are switched off.

As the fuel from the group V tanks is consumed, the bottom transmitters of the No. 9 tanks (it. 394 and 373) are actuated and then:

- the yellow "Fuel remaining for 60 minutes' flight" indicator lights (it. 383) installed on the right and left pilots' control panels come on;
- the signal for switching off the group IV pumps is repeated.

After all fuel in the group V tanks is consumed, fuel is transfered from the group VI tanks.

The middle transmitters of the probes in the No.4 tanks (it.1631 and 1633) actuated, the group V fuel pumps are switched off. As the fuel from group VI tanks is consumed, the bottom transmitters of the probes in the No.4 tanks (it. 1631 and 1633) are actuated, the red "Fuel remaining for 45 minutes' flight" warning lights (it. 382) on the pilots' right and left [redacted] instrument panels come on, and the [redacted] relays sending a repeated signal for switching off the group V pumps are actuated.

Declassified in Part - Sanitized Copy Approved for Release 2011/12/14 : CIA-RDP80T00246A064200070001-1

Declassified in Part - Sanitized Copy Approved for Release 2011/12/14 : CIA-RDP80T00246A064200070001-1

Switching the group VI fuel pumps over to [illegible] is accomplished by the use of the B-45 switch (it.[illegible]) installed on the fuel control panel.

Manual Control of the Fuel Transfer Sequence

The manual control is a stand-by system required for control of the fuel transfer sequence in case of faulty circuits of fuel gauge or transmitters, or in case of failure of both automatic control units. The sequence of fuel transfer is identical to that established for automatic control, but if necessary it may be changed, depending on the existing situation, and programmed by the pilot.

To switch over to manual control of the fuel consumption sequence, it is necessary to place the B-45 power switch (it.[illegible]) installed on the fuel control panel in the "Manual" position.

Fuel Quantity Measuring

The СЭТС-260Б capacitance-type fuel [illegible] fuel quantity in separate groups of tanks, or the [illegible] in all six groups of tanks in each wing.

The operation of the fuel gauge measuring circuits is based on the operation of

- twelve fuel gauge probes (six for each wing);
- two УТС-52-18 amplifiers (it.394 and 395);
- two ПД2-1 remote switches (it.389 and 390);
- ПГ-8 selector switch (it. 396);
- УТД-52 dual-pointer indicator (it.[illegible]);

Operation of the СЭТС-260Б fuel gauge measuring circuit

Measurement of fuel quantity in the aircraft fuel tanks by the use of a capacitance-type fuel gauge is based on [illegible] of the

Declassified in Part - Sanitized Copy Approved for Release 2011/12/14 : CIA-RDP80T00246A064200070001-1

Declassified in Part - Sanitized Copy Approved for Release 2011/12/14 : CIA-RDP80T00246A064200070001-1

capacitor-probe electric capacitance with fuel level and, hence, with the quantity of fuel in the tanks.

The probes are installed vertically in the aircraft fuel tanks and consist of several (up to five) coaxial tubes with air gaps between them.

When the tanks are filled with fuel, these gaps are filled, too.

As the fuel dielectric constant is about twice as great as that of air, the variation of fuel level in the gaps between the tubes results in variation of the probe's capacitance.

The probe is connected to one of the self-balancing a-c bridge arms. Unbalancing voltage formed as a result of variation of the probe's capacitance is amplified (in voltage and power) by an electronic amplifier and applied to the control winding of the ДИД-0.5 induction motor installed in the fuel gauge indicator. The motor through a gear-box turns the viper of the feed-back potentiometer (until the bridge is balanced), and the indicator pointer indicating the quantity of fuel in the tanks. The indicator dial is calibrated in kilogrammes.

Capacitance probes for separate group of tanks or probes of all groups of tanks indicating the sum of fuel quantity in the right and left wings may be connected to the measuring units by means of the ПГ-8 or ПД2-1 switches.

Fuel Pressure Warning

A light signal system indicating fuel pressure in the lines down the fuel booster pumps is used to check the unit 463 fuel pumps for proper operation and the СЭУС-250В fuel gauge automatic control unit for correct switching on these pumps, and to determine the time of fuel burn-out.

The circuit of the fuel pressure warning system comprises:

Declassified in Part - Sanitized Copy Approved for Release 2011/12/14 : CIA-RDP80T00246A064200070001-1

Declassified in Part - Sanitized Copy Approved for Release 2011/12/14 : CIA-RDP80T00246A064200070001-1

- fourteen СДУ-2А-3-13 signal units installed [illegible] lines just down the fuel booster pumps, before the [illegible] each group of tanks;

- fourteen green ЗМ-37 warning lights installed on the [illegible] control board in the central part of the [illegible]

Cross-feed Valve Control [illegible]

Control of the fuel system cross-feed valve [illegible] two МЭК-2 electric mechanisms [illegible] of the wing centre section.

The electric mechanism is fed from [illegible] system. The ПП8-45 selector switch [illegible] feed valve open position indicator light [illegible] the fuel control board on the pilot's [illegible]

Fuel flow [illegible]

Each engine is provided with [illegible] fuel flow. The fuel flow is measured by [illegible] flow meters. The РТЭС-1,2-Б1 fuel flow meter [illegible] present (hourly) fuel flow for the given engine [illegible] the quantity of fuel in the tanks (in kgs) for [illegible]

The fuel flow meter system operates [illegible] 400 cps.

The fuel flow meter system comprises:

- two ТРН-50 step-down transformers (it. [illegible]
- four ПТ-56 thyratron breakers (it. 536 and [illegible]
- combined transmitters of total and hourly [illegible] 565, 567 and 586) installed by one on each engine;
- one РТЭС-1,2-Б1 indicator for each engine (it. 61, [illegible] 598) installed on the central board of the [illegible]

Declassified in Part - Sanitized Copy Approved for Release 2011/12/14 : CIA-RDP80T00246A064200070001-1

Declassified in Part - Sanitized Copy Approved for Release 2011/12/14 : CIA-RDP80T00246A064200070001-1

29. ССП-2А Fire-Extinguishing System

The electric circuitry of the ССП-2А fire-extinguishing system provides for:

a) automatic control of the fire-extinguishing operation when fire occurs in any fire-hazard area;

b) manual control of the fire-extinguishing operation;

c) emergency cut-in of the fire-extinguishing system during a crash landing with L.G. retracted;

d) testing the system for proper operation.

The ССП-2А fire-extinguishing system consists of eighteen independent channels servicing eight aircraft areas, comprising engine nacelles and wing tank areas (inboard and outboard).

Three channels are provided for each engine nacelle, one channel for inboard tanks bay and two channels - for outboard tanks bay in each wing.

The ССП-2А system comprises:

a) seventy two ДПС-1А fire detectors consisting of thermobatteries with chromel-copel thermocouples connected in series; each channel contains three ДПС-1А detectors connected in series;

b) seventy two Р-417 receptacles for connecting fire detectors;

c) four БИ-ПА actuators, two - for engine nacelles, and two - for wing tanks bays;

d) six ОС-8М fire extinguishers;

e) two sets of distributing valves servicing the main lines of fire hazard areas;

f) a panel for testing the fire-extinguishing system for proper operation;

g) a distribution box.

Declassified in Part - Sanitized Copy Approved for Release 2011/12/14 : CIA-RDP80T00246A064200070001-1

Declassified in Part - Sanitized Copy Approved for Release 2011/12/14 : CIA-RDP80T00246A064200070001-1

Automatic Control of Fire-Extinguishing system

If fire breakes out in any fire hazard area, the automatic equipment of the fire-extinguishing system will provide:

- light warning signal to the pilot on fire outbreak in a definite area;
- opening the distributing valve connecting the main line common for all extinguishers to the line of the bay in which fire coured;
- firing of cartridge actuated heads of first-shot extinguishers, with the extinguishers discharging into the open line;
- light signal indicating the pilot that the cartridges of the first-shot extinguishers have been fired;
- preparing the electric circuit for manual control of cartridge actuated heads on other extinguishers, if the first-shot extinguishers have not suppressed the fire.

Electric circuits operation

To restore the electric circuits to initial operating condition it is necessary:

1. To close three A30-15 C.B. located on the C.B. panel in the "Fire extinguishing system" group and marked as follows:
   - "Fire-extinguishers" it.1240
   - "Engine fire-extinguishing equipment" it.1283
   - "Wings fire-extinguishing equipment" it.1273;
2. To place the fire-extinguishing control switch located on the pilot's main instrument panel in "Fire -extinguishing"

Declassified in Part - Sanitized Copy Approved for Release 2011/12/14 : CIA-RDP80T00246A064200070001-1

Declassified in Part - Sanitized Copy Approved for Release 2011/12/14 : CIA-RDP80T00246A064200070001-1

→ position; this must cause the yellow lights (it. 1489, 1490, 1491, 1492, 1493, 1494) to go on, indicating that the circuits of the extinguisher cartridge-actuated heads are in proper condition for operation.

If temperature in any engine bay (for instance, in the No.1 engine bay) rises at a certain rate or flames envelope the engine, thermobatteries of fire detectors will generate an thermoelectromotive force sufficient to energize the system. This force is applied to the РПС-5 polarized relay (P_1) of the БИ-Ц actuator causing it to operate.

The "plus" of the aircraft distribution system is then supplied through closed contacts (Я and Л) of relay (P_1) to the ТКБ-52 ПД relay (it.4568). The ТКБ-52 ПД relay operates to supply the "plus" through its new closed contacts to the red button-lamp (it. 1493) signalling to the pilot of fire outbreak in the No. 1 engine area.

Simultaneously, the aircraft distribution system voltage is supplied to the on-off valve of the main line of the engine No.1 fire-extinguishing system, which, being opened, is interlocked by limit switches of the valve. Passing through the second limit switch of the valve and terminal (2) of the valve plug-connector, the "plus" of the aircraft distribution system reaches the ТКБ-52 ПД relay (it. 1268). The relay operates to be interlocked through the limit switches of the valve. Simultaneously, the "Cartridge heads in good condition" signal circuit of No.1 and No.2 fire-extinguishers will be opened, the aircraft distribution system present voltage will be supplied to the extinguisher heads, and the extinguishers will discharge through the open valve into the No.1 engine bay. "Cartridge heads in good condition" lights (it.1494, and 1495) for the No.1 and No.2 extinguishers will go out. At the same time the voltage will be supplied through terminal (2) of the valve(it.1294) plug-connector to 204 KB buttons of the other four extinguishers

Declassified in Part - Sanitized Copy Approved for Release 2011/12/14 : CIA-RDP80T00246A064200070001-1

Declassified in Part - Sanitized Copy Approved for Release 2011/12/14 : CIA-RDP80T00246A064200070001-1

(it.1249, 1250, 1485, 1495) preparing them for manual switching-on in the event that the fire cannot be suppressed with the extinguishant supplied by the No. 1 and No. 2 extinguishers.

If the fire is extinguished (temperature in the bay ceased rising or decreased to 130°), the thermoelectromotive force of the fire detectors will drop, the relay (P_1) contacts will open and the ТКБ-52 ПД relay (it. 4658) will be disconnected. However, the button-lamp (it. 1473) will stay on, and the control valve (it.1254) will remain open.

To make sure the fire has been extinguished, the pilot must momentarily place the 3 ППН-45П three-pole switch (it.1475) of the fire-extinguishing system to "OFF" and then turn it on again. If after placing the switch in the "Fire-extinguishing" position the button-lamp (it. 1473) does not go on, fire is extinguished and the system reset (relay, it.4658 disconnected). At the same time when the fire-extinguishing switch is momentarily placed to "OFF", the valve (it. 1254) will be disinterlocked and will close the main lines, and the relays (it. 1266, 1267) will operate to disconnect the extinguisher switch-on buttons from the aircraft distribution system.

The "Cartridge heads in good condition" signal lamps (it.1494, 1493) for the Nos 1 and 2 extinguishers cartridge-actuated heads will not come on, since the cartridge heads filaments connected with lamps in series burn out when the extinguishers start operating.

Automatic control of the tanks section fire-extinguishing system is similar to that described above.

Manual Control of Fire-extinguishing System

The electric circuitry allows to control the fire-extinguishing system manually if for some reason the detectors and БИ-11А actuator

Declassified in Part - Sanitized Copy Approved for Release 2011/12/14 : CIA-RDP80T00246A064200070001-1

Declassified in Part - Sanitized Copy Approved for Release 2011/12/14 : CIA-RDP80T00246A064200070001-1

fail to operate during the fire visually noticed by the pilot. It suffices to momentarily push-in the "Fire-alarm" [redacted] button-lamp for the corresponding bay, thus closing the button contacts. This results in shunting the channels of the detectors and corresponding БИ-ПА actuator. Further operation of the electric circuit is similar to the described above.

Switching-on the Fire-Extinguishing System Automatically During a Crash Landing with L.G. Retracted

Distortion of the lower fuselage skin, if caused by a crash landing with L.G. retracted, will result in operation of [redacted] limit switch (it.2570) located between frames Nos 22 and 23. This, in turn, will result in opening all main lines control valves and illuminating all button-lamps. Once the valves are open, all extinguishers will be discharged.

Testing the Fire-Extinguishing System for Proper Operation

The СОП-2А fire-extinguishing system is tested for trouble-free operation before each flight by means of a test panel mounted on the rear wall of the pilot's bridge.

The test is accomplished as follows:

a) the C.B. of the fire-extinguishing system is closed;

b) the ЗПНВ-54П system control switch (it. 1176) is placed in the "Test" [redacted] position; this results in disconnecting the cartridge actuating heads of the Nos 1 and 2 extinguishers from the control circuits to prevent the extinguishers from discharging;

c) the [redacted] switch (it. 4688) on the check panel for any of the channels is momentarily pushed in.

Thereafter operation of the fire-extinguishing system is checked in the usual manner, except that the cartridges

Declassified in Part - Sanitized Copy Approved for Release 2011/12/14 : CIA-RDP80T00246A064200070001-1

Declassified in Part - Sanitized Copy Approved for Release 2011/12/14 : CIA-RDP80T00246A064200070001-1

are not fired. The other channels are [illegible].

To restore the circuit, the control [illegible] of the [illegible] sing system should be momentarily [illegible] to "OFF" [illegible] to the "Test" [redacted] position after [illegible].

Fuel Stop-Valves Control

Fuel stop-valves controlled by the M3[illegible] electrical mechanism are installed in fuel system pipe lines, near the [illegible] inlets. The valves are installed on the wing front spar in direct [illegible] of the engines.

Electrical circuit of the fuel stop-valve control provides for:

a) manual control of the M3[illegible] valve mechanism.

b) light signal indication of the valves [illegible] position.

30. Fuel Tanks Purge System

Fuel tanks purge system is used to prevent [illegible] kerosene vapours in fuel tanks with [illegible] [illegible] sumed, the tanks are filled with [illegible].

The system is also used on the [illegible] which a fire occured in flight, to minimize the [illegible] [illegible] caused by extinguishant, and [illegible] extinguishant contained in six circuit [illegible] consumed.

The electric circuit of the fuel tanks purge [illegible]

a) to switch on the system for filling the [illegible]

b) to heat the elements [redacted] of the CO_2 supply [redacted] system.

c) to discharge the CO_2 bottles into the [illegible] system.

Declassified in Part - Sanitized Copy Approved for Release 2011/12/14 : CIA-RDP80T00246A064200070001-1

Declassified in Part - Sanitized Copy Approved for Release 2011/12/14 : CIA-RDP80T00246A064200070001-1

31. АВ-68И Propeller Feathering Control Electric Circuit

Electric circuit of the АВ-68И propeller feathering control allows:

1. To feather the propeller blades automatically under the following conditions:

- by signals from a transmitter in the torque meter system with engine operated at 0.7 normal rated power and above, including the take-off power when the engine power decreases below 0.1 normal power;
- by signals from the propeller shaft negative thrust transmitter at thrust exceeding 1800 kg;
- by the oil pressure in the fuel control - when the engine accelerates to maximum permissible rpm, n = 13500 ± 250 rpm.

2. To test the automatic feathering system:

- using the torque meter system transmitter;
- using the propeller shaft negative thrust transmitter.

3. To feather the propeller blades manually by the use of the КФЛ -37 button.

4. To unfeather the propeller by the use of the КФЛ -37 button.

5. To feather the propeller partially both with an operative and inoperative engine.

6. To unlock the propeller blades locked at intermediate angle stop.

Feathering system equipment for each engine (e.g. for the No.2 engine) consists of;

- НФ -2Т feathering oilpump with ЭМ-44 electrometer (it.86);
- two-plunger feathering transmitter (it.5826) for operation in set with the torque meter system;

Declassified in Part - Sanitized Copy Approved for Release 2011/12/14 : CIA-RDP80T00246A064200070001-1

Declassified in Part - Sanitized Copy Approved for Release 2011/12/14 : CIA-RDP80T00246A064200070001-1

- device in КТА-5 unit, interlocking the feathering system operating by signals from the torque meter transmitter (it.5827);

- transmitter (it.4959) for feathering propeller at maximum permissible rpm;

- transmitter (it.4960) for feathering propeller at definite negative thrust value, mounted on Р-68И regulator;

- СДУ -5-2.5 negative thrust signal device, it.4974;

- СДУ -9-12.5 unfeathering signal device, it. 4976;

- СДУ -9А-20 propeller blades unlocking signal device, it.4977;

- electrically operated valve (it.4975) for testing the system for feathering at negative thrust;

- ЭКТ-68М electrically operated valve (it.4978) for unlocking the propeller blades locked at the stop, mounted on Р-68И regulator;

- ЭКТ-68И unfeathering electrically operated valve (it.1330), mounted on Р-68И regulator;

- МКТ-4 electromagnetic fuel supply cut-off valve (it.5828) installed in the КТА-5ф fuel control unit;

- feathering system distribution box;

- АВП-4 feathering timer (it. 80);

- КФЛ -37 button for manual feathering and unfeathering (it.87);

- Г.Р.З. 604.004 partial feathering button (it.2524);

- 2В-45 automatic feathering test switch (it. 90);

- ВП-45М switch (it.4968) for testing the system for feathering at negative thrust;

- "Automatic feathering system ready" signal lamp (it.5040), yellow;

- "unfeathering pump on" signal lamp (it.91), blue;

- Engine failure signal lamp [redacted] red, bild-in the button;

- propeller unfeathering signal lamp (it.4969), white.

All buttons, switches and signal lamps mentioned above are mounted on the feathering electric panel.

Declassified in Part - Sanitized Copy Approved for Release 2011/12/14 : CIA-RDP80T00246A064200070001-1

Declassified in Part - Sanitized Copy Approved for Release 2011/12/14 : CIA-RDP80T00246A064200070001-1

- "Propeller blades unlocked" signal lamp (it.4370), green, installed on the pilots' central instrument panel.

Automatic Feathering the Propeller by Signals from the Torque Meter System Transmitter

In automatic mode of operation with the use of the torque meter system transmitter, the electric circuit of the feathering system operates as follows.

With the interlocking circuit closed by the command signal from the torque meter system transmitter (it.5827) (at 0.7 engine normal rated power and above) and the oil pressure in the KM torque meter system reaching 30 kg/cm^2, the Nos 1 and 2 terminals of the plug-connector of the automatic feathering transmitter close (the Nos 2 and 3 terminals stay open at a pressure above 6 kg/cm^2) and the "plus" of the aircraft distribution system is applied to the coil of the relay (it.4618).

The relay closes and interlocks. At the same time the yellow lamp (it.5040) on the feathering panel goes on, indicating that the system is ready for automatic feathering. If the engine fails (torque decreasing), oil pressure in the torque meter system will decrease; when pressure drops to 6 ± 0.5 kg/cm^2, the Nos. 2 and 3 terminals of the plug-connector of the automatic feathering unit transmitter will be closed.

The aircraft distribution system "Stand-by-Plus" is then supplied from the No.2 terminal of the transmitter plug-connector to the No.3 terminal and then to the coil of the automatic feathering relay (it. 4619). The relay closes and interlocks.

At the same time

- the feathering timer (it.80) is switched on;
- the No.4 engine stop valve is energized;

Declassified in Part - Sanitized Copy Approved for Release 2011/12/14 : CIA-RDP80T00246A064200070001-1

Declassified in Part - Sanitized Copy Approved for Release 2011/12/14 : CIA-RDP80T00246A064200070001-1

- the "Ready" [redacted] yellow lamp (it.5040) goes out;
- the НФ-2Т feathering oilpump (it.85) is switched on;
- the blue lamp (it.91) indicating that the feathering pump is on illuminates;
- "Engine failure" red lamp [redacted] goes on.

In 20 sec. the working cycle of the АВП-4 timer is complete, the feathering pump is switched on, the blue lamp (it.91) indicating the feathering pump operation and "Engine failure" red lamp [redacted] go out.

The engine stop relay (it.4622a) will stay interlocked. The positive side of the aircraft distribution system is then connected to the engine stop valve.

Automatic Feathering the Propeller Blades by Use of the Propeller Shaft Negative Thrust Transmitter

If a negative thrust is developed, the propeller blades are automatically feathered.

When automatic feathering is accomplished by signal from the negative thrust transmitter, the electric circuit operates as follows.

The "plus" of the aircraft distribution system is supplied from the СП-15 fuse (it.1820) to the No.1 terminal of the transmitter plug-connector (it.4960).

When the shaft negative thrust exceeds 1800 kg, the transmitter limit switch (it. 4960) is closed and the "plus" of the aircraft distribution system is supplied to the coil of the automatic feathering relay (it. 4619). The relay closes and interlocks. Then -

- the АВП-4 feathering timer (it.80) is switched on;
- the АКТ-4 engine stop valve is energized;
- the НФ-2Т feathering pump (it. 85) is switched on; propeller blades are feathered;

Declassified in Part - Sanitized Copy Approved for Release 2011/12/14 : CIA-RDP80T00246A064200070001-1

Declassified in Part - Sanitized Copy Approved for Release 2011/12/14 : CIA-RDP80T00246A064200070001-1

-the blue lamp (it.91) illuminates indicating that the feathering pump is switched on;

-"Engine failure" red lamp goes on.

Electric circuits formed at switching on the feaering equipment and their operation are similar to those described above for the automatic feathering by signals from the torque meter transmitter.

Automatic Feathering the Propeller Blades by Signals from the Maximum Permissible Speed Transmitter

The propeller blades will be automatically feathered when engine speed reaches the maximum rpm n_t=13500 ± 2% rpm.

When engine speed increases to the specified limit the contacts of a limit switch (it.4959) in the maximum permissible rpm transmitter close, and the automatic feathering electric circuit operates as follows.

The "plus" of the aircraft distribution system is supplied from a СП-15 fuse (it.1820) through the now closed contacts of the maximum permissible rpm transmitter (it.4959) to the coil of the automatic feathering relay (it.4619). The relay closes and interlocks.

At the same time-

- the АВП-4 feathering timer is switched on;
- the МКТ-4 engine stop valve is energized;
- the НФ-2Т feathering oil-pump (it.86) is switched on; propeller blades are feathered;
- blue lamp (it.91) illuminates indicating that the feathering pump is switched on;
- "Engine failure" red lamp goes on.

Further operation of the system is similar to those described above for the automatic feathering by signals from the torque meter transmitter.

Declassified in Part - Sanitized Copy Approved for Release 2011/12/14 : CIA-RDP80T00246A064200070001-1

Declassified in Part - Sanitized Copy Approved for Release 2011/12/14 : CIA-RDP80T00246A064200070001-1

Manual Propeller Feathering

To feather a propeller manually, it is necessary to momentarily press and release the КФЛ-37 button. This results in applying the "plus" of the aircraft distribution system to the holding coil of the КФЛ-37 button. The button is retained in the pushed-in position for 20 sec. since the "minus" is supplied from the АВП-4 timer. Insultaneously the "plus" is supplied to the feathering relay in the feathering distribution box.

Further operation of the circuitry is similar to the operation of the automatic feathering system using the torque meter transmitter.

Testing the Equipment of the Automatic Feathering System Using the Torque Meter Transmitter

The propeller automatic feathering control equipment should be testing on the ground with running engines.

The test is accomplished without feathering the propeller and required no command for complete cutting off the fuel supply to the engine for which the test is being carried out.

The electric circuitry of the system operates as follows.

With the interlocking circuit closed by a command signal from the torque meter system transmitter (it.5827) (closed at 0.7 engine normal rated power and above) and the oil pressure in the torque meter system reaching 30kg/cm^2, the Nos. 1 and 2 terminals of the plug-connector of the automatic feathering transmitter (it.5826) are closed (the Nos. 2 and 3 terminals stay open at a pressure above 6kg/cm^2) and the "plus" of the aircraft distribution system is applied to the coil of the relay (it.4618) which prepares the system for automatic feathering. The relay closes and interlocks. At the same time the yellow lamp (it.5040) on the feathering electric panel

Declassified in Part - Sanitized Copy Approved for Release 2011/12/14 : CIA-RDP80T00246A064200070001-1

Declassified in Part - Sanitized Copy Approved for Release 2011/12/14 : CIA-RDP80T00246A064200070001-1

goes on, indicating that the system is ready for automatic feathering.

When the lamp (it.5040) illuminates, the automatic feathering test switch (it.90) on the feathering panel should be turned to "ON" and then the "Propeller Unlocked" switch on the pilots' console should be closed, too. This will cause the green lamp (it.4970) on the pilot's instrument panel to illuminate, indicating that the propeller is unlocked.

The switch (it. 90) supplies the "plus" of the aircraft distribution system to the coil of the relay (it. 4623) which energizes the electromagnetic valve (it. 1830) and opens the circuit of engine stop valve.

The switch (it.90) also serves to supply the "plus" of the aircraft distribution system at the start of system testing operation, when the automatic feathering interlocking circuit in the fuel control unit (it. 5827) is open.

For further operation of the circuitry it is necessary to place the throttle of the engine under check in idling position.

When pressure in the torque meter system drops to 6 ± 0.5 kg/cm², a limit switch of the automatic feathering transmitter (it.5826) operates to close the Nos 2 and 3 terminals of the plug-connectors of the automatic feathering transmitter. The "plus" of the aircraft distribution system is supplied to the coil of the automatic feathering relay (it. 4619).

The relay closes and interlocks. At the same time -

- the АВН-4 feathering timer (it. 80) is switched on;
- the [illegible] feathering oil pump (it. 86) is switched on; the propeller blades move up to the $\gamma = 0$ position, since the electromagnetic valves (it. 4978) used for unfeathering and locks release operations have been previously energized;

Declassified in Part - Sanitized Copy Approved for Release 2011/12/14 : CIA-RDP80T00246A064200070001-1

Declassified in Part - Sanitized Copy Approved for Release 2011/12/14 : CIA-RDP80T00246A064200070001-1

- the blue lamp (it.91) goes on, indicating that the feathering pump is switched on;

- the "Engine failure" red lamp [redacted] goes on.

Electric circuits formed at switching on the feathering equipment and their operation are similar to those described above for the automatic feathering by signals from the torque meter transmeter, except that the engine stop relay (it.4822a) resets after 20 second operation since there is no interlocking circuit, the test relay (it. 4823) being switched on.

Testing the Equipment of the Automatic Feathering System Using the Negative Thrust Transmitter

The automatic feathering system using the negative thrust transmitter is tested at $\alpha_{shaft} = 0^{\circ}$ or $\alpha_{shaft} > 20^{\circ}$, as indicated on the УПРТ indicator.

1. When testing at $\alpha_{shaft} = 0$, the automatic feathering system test switch (it. 4958) should be placed in "Test" position, with engine idling. This will result in switching on the test circuit electromagnet and, consequently, in delivery of oil pressure to the command channel, closing contacts of the negative thrust indicator (it.4963) and illuminating the "Negative thrust critical" warning lamp [redacted]; other electric feathering equipment will remain inoperative.

Oil pressure drop in the command channel is a command for feathering the propeller blades, but the blades will not be feathered because the engine throttle lever is set at $\alpha_{shaft} < 18^{\circ}$.

2. For testing the system at $\alpha_{shaft} > 20^{\circ}$, the engine throttle lever is loaded in the position corresponding to $\alpha_{shaft} = 22\text{-}24^{\circ}$ and the last button switch (it.4958) is depressed. As a result, oil pressure in the command channel will drop, the contacts of the neg-

Declassified in Part - Sanitized Copy Approved for Release 2011/12/14 : CIA-RDP80T00246A064200070001-1

Declassified in Part - Sanitized Copy Approved for Release 2011/12/14 : CIA-RDP80T00246A064200070001-1

[redacted]

[illegible]

[illegible] КФЛ -37 button [illegible]

[illegible] for 2 [illegible]

[illegible] on the ground, [illegible] (it. [illegible]), [illegible] to more than 9 [illegible]

[illegible] unfeathering [illegible]

When the КФЛ -37 button [illegible] aircraft distribution [illegible] (it. 86), signal lamp (it. [illegible]). [illegible] valve (it. 18[illegible]). Unfeathering [illegible] (it. 4969) controlled [illegible]

When the КФЛ -37 button [illegible] is immediately cut out, and the [illegible]

Propeller Partial Feathering

The propeller partial feathering [illegible] means for testing the engine [illegible] engine.

Declassified in Part - Sanitized Copy Approved for Release 2011/12/14 : CIA-RDP80T00246A064200070001-1

Declassified in Part - Sanitized Copy Approved for Release 2011/12/14 : CIA-RDP80T00246A064200070001-1

For partial feathering the propeller, it is necessary to momentarily depress the partial feathering button (it.2524) located on the feathering electric panel. This results in supplying the 'plus' of the aircraft distribution system to the coil of the contactor (it.4[illegible]) which operates to close the circuit of the feathering [illegible] signal lamp (it.91).

While the button (it. 2524) is held depressed, the feathering pump will go on operating, the lamp (it.91) will stay on, and the propeller pitch will be continuously increasing.

Thus the propeller may be feathered by pressing the partial feathering button (it. 2524) without stopping the engine.

CAUTION ! For partial feathering the propeller on the operating engine the button (it.2524) should be depressed momentarily to avoid the full feathering of the propeller blades.

Unlocking the Propeller Blades Locked in Intermediate Angle Position

When the engine throttle is retarded and the blades reach the intermediate angle, they will be locked at the intermediate hydraulic stop.

To unlock the propeller blades set in this position with engine running, it is necessary to close the propeller lock release switch (it. 89).

Closing the switch (it.89) results in energizing the electromagnet (it.4978) which releases the propeller blades locked at the intermediate angle stop.

Note: As the wiring of the propeller automatic feathering system actuated by the negative thrust and max. r.p.m. is de-energized and insulated at the plug connectors of each engine, the automatic feathering of the propellers at the negative thrust and max. r.p. m. does not occur.

Declassified in Part - Sanitized Copy Approved for Release 2011/12/14 : CIA-RDP80T00246A064200070001-1

Declassified in Part - Sanitized Copy Approved for Release 2011/12/14 : CIA-RDP80T00246A064200070001-1

32. Trim-Tab Control [illegible]

The [illegible] control [illegible] the rudder, [illegible] elevator, [illegible]

The rudder [illegible] [illegible] OM [illegible]

The elevator [illegible] control [illegible]

Trim-tabs [illegible] deflection [illegible] switches mounted in the [illegible]

The rudder and [illegible] trim-tabs panel located [illegible] the [illegible]

[illegible] interlocking, the [illegible] controller [illegible]

The circuit [illegible]

[illegible] control circuit [illegible]

[illegible]

When the [illegible] switch [illegible] tab panel [illegible] to the [illegible] of the [illegible] this causes the rudder [illegible] flight results in deflection [illegible]

If the switch [illegible] position, the trim-tab is deflected [illegible] the right. [illegible]

Declassified in Part - Sanitized Copy Approved for Release 2011/12/14 : CIA-RDP80T00246A064200070001-1

Declassified in Part - Sanitized Copy Approved for Release 2011/12/14 : CIA-RDP80T00246A064200070001-1

neutral position equals to 1[illegible]° and is limited by limit switches in the ЖП-100М electromechanism.

When the trim-tab is in the neutral position, the limit switch in the electromechanism is closed and white lamps (it. [illegible] and [illegible]) on the pilots' trim-tab panel are illuminated, indicating that the rudder trim-tab is in the neutral position.

The rudder trim-tab control electric circuit for the pilot functions in the same way; when it is energized the copilot's trim-tab controls are disconnected.

Aileron trim-tab control

When the "2ПН-20" switch (it. 1225), located on copilot's trim-tab panel, is placed in the extreme right position, the current is applied to the [illegible] terminal of the left-aileron trim-tab ЖП-100М electromechanism (it. 1234) and to the [illegible],2 terminal of the right aileron trim-tab ЖП-100М electromechanism (it. 12[illegible]). This causes the aileron trim-tab to deflect upward and the right aileron trim-tab - downward which, in flight, results in deflection of the left-aileron downward and the right-aileron - upward.

For deflecting the ailerons in opposite directions, the control switch (it. 1225) is placed in the extreme left position.

The aileron trim-tab maximum deflection angles are 3° upward and downward from neutral position and are limited by limit switches in the ЖП-100М electromechanism. To interlock the copilot's aileron trim-tab controls when the trim-tabs are controlled by the pilot, the "2ПН-20" switch (it. 1225) located on the pilot's trim-tab panel is connected with the ПН-45М switch (it. 1228) through a common handle.

When these switches are used and the aileron trim-tab electromechanisms start operating, the copilot's trim-tab control circuit is opened.

Declassified in Part - Sanitized Copy Approved for Release 2011/12/14 : CIA-RDP80T00246A064200070001-1

Declassified in Part - Sanitized Copy Approved for Release 2011/12/14 : CIA-RDP80T00246A064200070001-1

When the aileron trim-tabs are in the neutral position, the limit switches in the electromechanism are closed, and the GNU -51 white lamps (it. 1537, 1936), located on the pilot's trim-tab panel, are illuminated indicating that the trim-tabs are in neutral position.

33. Landing Gear and Flaps Systems

The aircraft is equipped with the following systems providing means for take-off and landing:

- L.G. extension/retraction and L.G. doors opening/closing system;
- main L.G. wheels braking and brake release system;
- nose wheels steering system;
- flaps extension and retraction system.

All operations involved in opening or closing the L.G. doors and extending or retracting the L.G. are sequenced by electrohydraulic and hydraulic units.

Main and emergency L.G. extension and retraction systems operate independently from each other.

To facilitate turning the aircraft during taxying, take-off and landing, the nose L.G. strut is equipped with a system providing steering for the nose wheels either side of centre.

Flaps are extended and retracted by hydraulically operated screw jacks. Landing gear and flaps are provided with light and audio signal systems.

The nose wheels brake-release and steering systems are provided with light signal devices.

Declassified in Part - Sanitized Copy Approved for Release 2011/12/14 : CIA-RDP80T00246A064200070001-1

Declassified in Part - Sanitized Copy Approved for Release 2011/12/14 : CIA-RDP80T00246A064200070001-1

L.G. Extension/Retraction and L.G. Doors Opening / Closing System

The system is used to control the operations of opening or closing doors, extending or retracting the L.G. the L.G. as well as to give indications to the pilots about the L.G. and L.G. doors position by means of light and audio signals.

System circuit operation.

When the aircraft is parked (i.e. L.G. shock absorbing struts are compressed), operation of the L.G. extension / retraction control system is impossible because the control system circuit is interlocked by a limit switch (it.4212).

The circuit operation is described below for the following cases: L.G. retracted, L.G. doors closed, L.G. doors closing system cut-out switch turned to "On".

When the АЗР-6 "L.G. signal system" C.B. (it.1013) is closed, the aircraft distribution system voltage is supplied to the "L.G. UP" signal lamps, located on the ППС-2В signal panel, and to the "L.G. doors closed" ("Створки закрыты") placard lamp of the ППС-2В signal unit.

If the pilot's L.G. control switch (it.1011) is placed in the "L.G. extension"position the aircraft distribution system voltage is supplied to the winding of the РА-142/1 electro-hydraulic valve (it.1007) L.G. doors will then open, breaking, by the action of the limit switches (it.1047, 1055), the power-supply circuit of the "L.G. doors closed" ("Створки закрыты") lamp and closing through the limit switch (it.6002) the circuit of "Main L.G. doors open" lamp (it.6000) located on the "instrument" panel.

Declassified in Part - Sanitized Copy Approved for Release 2011/12/14 : CIA-RDP80T00246A064200070001-1

Declassified in Part - Sanitized Copy Approved for Release 2011/12/14 : CIA-RDP80T00246A064200070001-1

When the L.G. doors are fully open, the L.G. will be unlocked and the extension started.

After the L.G. up locks have been released, the limit switches (it.1057, 1054, 1049) open, breaking the power-supply circuit of "L.G. retracted" signal lamps on the ППС-2В signal unit.

When the L.G. is locked in down position the limit switches (it.1056, 1053, 1048) operate to supply power to the "L.G. released" signal lamp on the ППС-2В signal unit.

When the L.G. doors are fully closed, the "L.G. doors closed" lamp on the ППС-2В signal unit will illuminate, and the "Main L.G. doors open" signal lamp on the instrument panel will go out. In this case, the L.G. control switch (it.1011) may be placed in neutral position which results in de-energizing the winding of the ГА-142/1 electro-hydraulic valve (it.1007).

L.G. is retracted by placing any of the switches in "Retract" position. This results in energizing the second half of the ГА-142/1 valve winding, which causes the valve to operate.

The L.G. doors will then open breaking by the action of limit switches (it.1047, 1055) the power-supply circuit of the "L.G. doors closed" ("Створки закрыты") lamp on the [illegible] signal unit and closing the limit switch (it.6002) the power-supply circuit of the "Main L.G. doors open" signal lamp on the pilots' center instrument panel, when the L.G. downlocks are released and the L.G. starts to retract.

The downlocks of L.G. released, the limit switches(it.1056, 1053, 1048) open de-energizing the coils of the relays (it.4635, 4634, 4631). The relays contacts open to break the power-supply circuit of the "L.G. released" signal lamps on the ППС-2В signal unit.

Declassified in Part - Sanitized Copy Approved for Release 2011/12/14 : CIA-RDP80T00246A064200070001-1

Declassified in Part - Sanitized Copy Approved for Release 2011/12/14 : CIA-RDP80T00246A064200070001-1

With the L.G. locked in the "UP" position, the limit switches (it. 1057, 1054, 1049) operate to supply power to the "L.G. extended" signal lamps on the ППС-2В signal unit when the L.G. doors start to close.

A provision is made for interlocking the switch (it. 1011) when the pilot's switch (it. 1011) is not in neutral position.

The lamps located on the face of the ППС-2В unit are tested by means of a "Lamp test" ("Проверка исправности ламп") button on the ППС-2В signal unit; once the button is depressed, the aircraft distribution system voltage is supplied to all signal lamps and all lamps illuminating various placards on the ППС-2В signal unit.

L.G. Audio Signal System

In landing approach with L.G. retracted, the light and audio signal system warns the pilot that L.G. should be extended.

If the throttle is moved to 32°±1 by the УПРТ-2 throttle control position indicator, four limit switches (it. 1072) located on the pilot's console close to supply voltage to the С-1 horn warning the pilot that L.G. should be released. The voltage will be also supplied to the lamp illuminating the placard "Release L.G." ("Выпусти масси") located on the ППС-2В signal unit.

If the L.G. is extended or the throttle advanced more than 32°±1 by УПРТ-2 throttle control position indicator, the light and audio signal system will stop to operate because the corresponding positive or negative side of the aircraft distribution system will be disconnected from the coil of the relay (it. 1058) and contacts Nos 5-6, 2-3 will be opened.

The "Release L.G." ("Выпусти масси") light and audio signal system may also be switched off manually by pressing the "Horn off" [redacted] button located on the pilot's console.

Declassified in Part - Sanitized Copy Approved for Release 2011/12/14 : CIA-RDP80T00246A064200070001-1

Declassified in Part - Sanitized Copy Approved for Release 2011/12/14 : CIA-RDP80T00246A064200070001-1

L.G. Doors emergency [illegible]

The emergency opening of the L.G. [illegible] FA-163/16 electrohydraulic vavle actuate[illegible] system. The valve is energized by the [illegible] located on the copilot's console.

Main L.G. Wheels Brake-[illegible]

The main L.G. wheels [illegible] automatic release of the wheel br[illegible] applying the brakes when ski[illegible] in over.

Circuit [illegible]

The brake-rele[illegible] (it. 996) locat[illegible] on [illegible]

When any [illegible] distribution [illegible] valves [illegible] to two [illegible] ready for releasing [illegible] the transmitter [illegible] negative [illegible] corresponding YB-[illegible] valves [illegible] been applied previously due to the closing of the h[illegible] This results in actuation of both [illegible] the signal lamp (it. 1061). [illegible] the oil pressure, previously [illegible] to the br[illegible] of the front wheels of the right and left main [illegible] releasing the brakes of these wheels.

In releasing the wheel brakes the YA-[illegible] contacts and disconnects the negative [illegible]

Declassified in Part - Sanitized Copy Approved for Release 2011/12/14 : CIA-RDP80T00246A064200070001-1

Declassified in Part - Sanitized Copy Approved for Release 2011/12/14 : CIA-RDP80T00246A064200070001-1

bution system from the hydraulic valves (it. 9225) and the "Brake-released" signal lamps (it. 1061). The valves will then be returned by springs to their initial position, and the oil pressure will be applied again to the brake shoes of the main L.G. front wheels; at the same time the "Brake-released" signal lamp will go out.

Nose L.G. Wheels Steering System

The nose L.G. leg wheels steering system is operated electro-hydraulically.

Circuit Operation

Manual control of the nose L.G. wheels steering motion is accomplished by turning the small control wheel located under the pilots' left instrument panel. When the control is pulled-out, the Nos 2 and 1 contacts of the limit switch (it. 5197) close to supply the aircraft distribution system voltage to the "Manual steering on" lamp (it. 984) and to the winding of the ÁA-163/16 electrohydraulic valve (it. 983).

The ÁA-163/16 valve energized, the oil pressure is supplied to the nose L.G. steering cylinder.

Provisions are made also for automatic turning of the nose L.G. wheels at take-off or landing, depending on the control pedals' positions.

At automatic control the manual control wheel is pushed-in and the Nos 3 and 4 contacts of the limit switch are closed.

By turning the switch (it. 5052) to "ON" the aircraft distribution system voltage is applied to the limit switch (it. 5055) and the "system ready" lamp (it. 5053).

During take-off or landing, when the nose L.G. shock-absorber piston is compressed, contacts Nos 0 and 2 of the limit switch (it. 5055)

Declassified in Part - Sanitized Copy Approved for Release 2011/12/14 : CIA-RDP80T00246A064200070001-1

Declassified in Part - Sanitized Copy Approved for Release 2011/12/14 : CIA-RDP80T00246A064200070001-1

are closed and the aircraft distribution system is connected to the "System On"- signal lamp (it.5054) and to the second winding of the ГА-163/16 valve ((it.983).

When the ГА-163/16valve is energized the oil pressure is applied to a control valve with the slide linked through a lever and a spring rod to the rudder bell crank on frame No.9.As the rudder is deflected, the slide is turned metering the oil flow to the hydr.J. wheels steering cylinder system. If the automatic steering control was been cut-in at take-off, the Nos. 0 and 2 contacts of the limit switch (it. 505) will open to disconnect the system as soon as the plane is airborne.

Flaps Control and Signal System

Flaps control and signal system is operated electro-hydraulically.

Circuit Operation

Flaps are extended and retracted by a hydraulic power unit driven by two ГА-36 hydraulic motors supplied through the ГА-142/1 valves from port side and starboard hydraulic systems,correspondingly.

The flaps are operated by the switch (it.1004) located on the pilot's pilot's console or by the switch (it.1003) located on the co-pilot's console.

The ГА-142/1 valves are disconnected by limit switches (it.999, 1000, 1001, 1002) located in the ПКВ-2 unit.

The limit switches are adjusted to cut off the valves supply when flaps are fully retracted and to limit the flaps deflection angle to 35° at landing.

The interlocking relay (it.1005) cuts off the co-pilot's flap control switch (it.1003) when the pilot's switch moved out of the neutral position.

Declassified in Part - Sanitized Copy Approved for Release 2011/12/14 : CIA-RDP80T00246A064200070001-1

Declassified in Part - Sanitized Copy Approved for Release 2011/12/14 : CIA-RDP80T00246A064200070001-1

Flaps Position Signal System

Flaps position is indicated by the УПЗ-1 flaps position indicator only.

A provision is made in the flap system circuitry for energizing the light and audio signal system at take-off when the throttles are advanced to an angle more than 40° by УПРТ-2 throttle control position indicator, L.G. is not retracted and the flaps deflection angle is not within 25°±2°. The system functions to remind the pilot that the flaps should be extended.

When throttles are advanced to an angle more than 40° by УП[illegible]-2 indicator, the Nos. 1 and 2 contacts of the limit switch [illegible] close, energizing the C-1 horn and the "[illegible]" ("[illegible] закрылки") signal lamp located on the ПП[illegible] signal unit.

Thus, the "RELEASE FLAPS" ("выпусти закрылки") [illegible] on and the horn will be sounding during take-off until the [illegible] extended to an angle of 23-27° or the L.G. is retracted after take-off.

The audio signal system is cut-off by the button [illegible].

34. Electrical De-icing and Heating System

The aircraft is equipped with de-icing and electrical heating system to prevent formation of ice on the aircraft surfaces under certain conditions and to ensure normal operation of various aircraft systems under low temperature conditions.

The System Provides for:

- electric heating of fin and horizontal stabilizer leading edges;
- electric heating of spinners and propeller blades;
- heating of navigator's and pilot's canopy glass panels.

Declassified in Part - Sanitized Copy Approved for Release 2011/12/14 : CIA-RDP80T00246A064200070001-1

Declassified in Part - Sanitized Copy Approved for Release 2011/12/14 : CIA-RDP80T00246A064200070001-1

- heating of the ТП-156М pitot tubes and static pressure ports;
- batteries heating;
- neutral gas [redacted] system elements heating;
- clock heating;
- wing de-icing;
- engine de-icing.

Tail Unit Electrical anti-icing System

Tail unit anti-icing system comprises a laminated structure pressure-bonded with synthetic glue and consisting of two thin metal skins with two glass-fabric layers and an electric heating element between them (outer layer serving for electric insulation, inner - for thermoelectric insulation).

Electric heating element consists of [redacted] electric wire heaters which represent two brass contact busses to which the constantan wire gauze is brazed.

Heated nose section of the tail unit extends for 10% chord.

Fin anti-icing system consists of six thermoelements divided into two sections: the lower consisting of two thermoelements connected in series, and the upper consisting of four thermoelements connected in series.

Anti-icing system for each half of the horizontal stabilizer consists of five thermoelements also divided into two sections; the inner consisting of two thermoelements connected in series, and the outer consisting of three thermoelements connected in series.

Each section has a contact bolt at one end and a negative bus at the outer end connecting the circuit to the frame with rivets.

The thermoelements receive d.c. power from the aircraft distribution system.

Each section is provided with a АД-155А-6К thermoswitch cutting

Declassified in Part - Sanitized Copy Approved for Release 2011/12/14 : CIA-RDP80T00246A064200070001-1

Declassified in Part - Sanitized Copy Approved for Release 2011/12/14 : CIA-RDP80T00246A064200070001-1

- heating of the ТП-156М pitot tubes and static pressure ports;
- batteries heating;
- neutral gas system elements heating;
- clock heating;
- wing de-icing;
- engine de-icing.

Tail Unit Electrical anti-icing system

Tail unit anti-icing system comprises laminated [illegible] cure-bonded with synthetic glue and consisting of two thin metal skins with two glass-fabric layers and an electric heating element between them (outer layer serving for electric insulation, inner - for thermo-electric insulation).

Electric heating element consists of [illegible] electric wire heaters which represent two brass contact buses to which the constantan wire [illegible] is brazed.

Heated nose section of the tail unit extends for 10 [illegible].

Fin anti-icing system consists of six thermoelements divided into two sections: the lower consisting of two thermoelements connected in series, and the upper consisting of four thermoelements connected in series.

Anti-icing system for each half of the horizontal stabilizer consists of five thermoelements also divided into two sections: the inner consisting of two thermoelements connected in series, and the outer consisting of three thermoelements connected in series.

Each section has a contact bolt at one end and a negative terminal at the outer end connecting the circuit to the frame with rivets.

The thermoelements receive d.c. power from the aircraft distribution system.

Each section is provided with a АД-155А-65 thermoswitch cutting out

Declassified in Part - Sanitized Copy Approved for Release 2011/12/14 : CIA-RDP80T00246A064200070001-1

Declassified in Part - Sanitized Copy Approved for Release 2011/12/14 : CIA-RDP80T00246A064200070001-1

off power supply in case of overheating.

Sections of thermoelements are heated intermittently; the whole anti-icing system operation cycle consists of two successive heating periods of 60 sec. duration each; the operation is controlled by MKA-3A programming electromechanism of the empennage anti-icing system.

Duration of heating periods has been established to provide for symmetrical de-icing of the control surfaces.

Stabilizer outer sections and fin lower section are switched on for heating during the first period; stabilizer inner sections and fin upper section are switched on for heating during the second period.

Circuit Operation

The MKA-3A programming mechanism (it.1193) is switched on by the B-49 switch (it.1191) when the circuit breaker (it.1192) is [illegible]. The "plus" of the aircraft distribution system is then applied to the signal lamp (it.2522) and the control coil of the KM-600Д contactor (it.1206) through certain terminals of the MKA-3A mechanism (for instance, through No.10 terminal), depending on the position of contacts in the MKA-3A mechanism. The "minus" of the aircraft distribution system is supplied to the contactor control coil through three thermo switches (it.1216, 1217, 1218) connected in series; the contactor operates to energize the stabilizer inner sections and fin upper section. After 60 seconds of operation the MKA-3A mechanism disconnects the positive side of the aircraft distribution system from the No.10 terminal of the mechanism plug-connector and connects the positive side to terminal No.11; this results in de-energizing the KM-600Д contactor (it-1206) and, consequently, in cutting off the supply from the above mentioned sections; the signal lamp (it.2522) will then go out; the KM-600Д contactor (it.1210) will be switched on and the

Declassified in Part - Sanitized Copy Approved for Release 2011/12/14 : CIA-RDP80T00246A064200070001-1

Declassified in Part - Sanitized Copy Approved for Release 2011/12/14 : CIA-RDP80T00246A064200070001-1

off power supply in case of overheating.

Sections of thermoelements are heated intermittently [illegible] anti-icing system operation cycle consists of two [illegible] periods of 60 sec. duration each, the operation [illegible] MEA-3A programming electromechanism of the [illegible] tem.

Duration of heating periods and [illegible] symmetrical de-icing of the aerofoil [illegible].

Stabilizer outer [illegible] for heating during the first period, shall [illegible] upper section are switched on for heating [illegible].

[illegible]

The MEA-3A programming [illegible] P-45 switch (it.1191 [illegible] the "plane" of the aircraft [illegible] signal lamp (it.7922) and the control [illegible] (it.120f) through certain terminals of the [illegible] stance, through No.10 terminal, [illegible] in the MEA-3A mechanism. The [illegible] tem is supplied to the contact [illegible] switches (it.1216, 1217, [illegible] operates to energize the stabilizer [illegible] tion. After 60 seconds of operation the MEA- [illegible] the positive side of the aircraft [illegible] terminal of the mechanism [illegible] side to terminal No.11; this [illegible] contactor (it-1206) and, consequently, [illegible] the above mentioned sections; the signal lamp [illegible] out; the КМ-600Д contactor (it.1210) [illegible] the

Declassified in Part - Sanitized Copy Approved for Release 2011/12/14 : CIA-RDP80T00246A064200070001-1

tabilizer outer sections and fin lower section will be energized.

If any of the thermoelectric detectors is heated up to $40^{0}C^{\pm10^{0}}$, he negative circuit of the control coil of the corresponding contactor ill be opened.

The circuit will be closed again, when the thermoelectric detector s cooled to $20^{0}C^{\pm10^{0}}$.

The empennage de-icing system may be checked in flight by the readings of left generators (G_1, G_2, G_3, G_4 ammeters). When the tail unit de-icing system is switched on or off, the load of each generator (with all left generators operating) must vary within 120-150 a.

Spinner and Propeller Anti-Icing System

Spinner and propeller electric anti-icing system is designed to protect the propeller blades and spinner from in-flight icing by intermittent heating the special heating elements imbedded in the leading edges of the blades and on the front surface of the propeller spinner.

The system is powered by 115 V., 400 cycles a.c. current from СГО-12 alternators.

Circuit Operation

When the switch (it.4598) is closed, the "plus" of the aircraft distribution system is supplied through the ПМК-4 programming mechanism to the coils of the contactors (it.210, 209) which operate to connect the anti-icing elements of the Nos.2 and 3 engines to the a.-c. system.

In 25.5 sec. after the ПМК-4 mechanism has been energized, the contactors (it.210,209) will open, disconnecting the heating elements of the Nos.2 and 3 engines from the a.c. system. Voltage is then supplied to the coils of the contactors (it.211,212) which operate to connect the de-icing elements of the Nos.1 and 4 engine propellers, and

Declassified in Part - Sanitized Copy Approved for Release 2011/12/14 : CIA-RDP80T00246A064200070001-1

Declassified in Part - Sanitized Copy Approved for Release 2011/12/14 : CIA-RDP80T00246A064200070001-1

spinners to the a.-c. system. Working cycle of the ПМК-4 programming mechanism takes 51 seconds. By the end of the cycle all dams are re-set, and if the No.2 terminal of the ПМК-4 mechanism plug-[illegible] is not de-energized, the ПМК-4 mechanism will start a new cycle.

Electrically Heated Glass [illegible]

Two windshield panels located [illegible] of the [illegible] co-pilot, and the navigator's lower [illegible] tric film heaters which serve to [illegible] windshield surfaces and prevent their [illegible] fo[illegible].

The heating system is supplied [illegible] 115 V, 4[illegible] cps [illegible]

Windshield electric heating [illegible] a.-c. circuit through an autot[illegible] voltage to the value required.

Windshield electric heating [illegible] AOC-81M three-channel automatic unit. [illegible] the aircraft d.c. distribution system.

Circuit [illegible]

Automatic windshield heating control [illegible] circuit operation.

One arm of the bridge is a [illegible] thermistor. [illegible] together with an electric heating element [illegible] silicate glass panels. Two other arms are formed by the [illegible] coils of РП-4 polarized relay.

The fourth arm is represented by an adjusting rheostat with [illegible] impedance.

The adjusting rheostat and the РП-4 relay are installed in the AOC-81M automatic unit.

Declassified in Part - Sanitized Copy Approved for Release 2011/12/14 : CIA-RDP80T00246A064200070001-1

Declassified in Part - Sanitized Copy Approved for Release 2011/12/14 : CIA-RDP80T00246A064200070001-1

The system is fed from the aircraft 115 v. a.c. distribution system.

The РП-4 relay will then close and disconnect the windshield heating system. If resistance of the transducer is increased, i.e. at windshield cooling, the current in the first coil of the relay will be increased and in the second coil decreased.

Contacts of the polarized relay will be closed, and the relay will supply voltage to the coil of the РВЗ-45 relay which in turn will supply voltage to the coil of the МКД-10Э ДА contactor. The 115 V. a.c. power will be supplied through СП-15 fuse and the closed contacts of the ТКД-10ЭДА relay to the autotransformer which will energize the windshield heating element.

The R_2 adjusting rheostat is used to adjust the automatic unit for required heating temperature.

The АОС-31М automatic unit has three bridge circuits (three channels), one for each glass panel.

Heating temperature may be controlled by turning the rheostat adjusted for heating temperature of 35^{0}_{-2}.

Aircraft Storage Battery Heating

The [redacted] 12САМ-28 batterys [redacted] are electrically heated to maintain the storage battery capacity at low ambient temperatures.

Neutral Gas [redacted] System elements [redacted] Heating

Neutral gas bottles and [redacted] system elements [redacted] are heated electrically, the power being supplied from the d-c distribution system. Each bottle

Declassified in Part - Sanitized Copy Approved for Release 2011/12/14 : CIA-RDP80T00246A064200070001-1

Declassified in Part - Sanitized Copy Approved for Release 2011/12/14 : CIA-RDP80T00246A064200070001-1

is equipped with electrically heated envelope. Reducing valves have electrically heated metal cover.

Clock Heating

The clock of each crew member, installed at a respective station, is equipped with an electrical heating element which is an integral part of the clock design.

Wing Anti-Icing System

The nose section of the wing is heated by hot air.

The hot air supply to the wing nose section is controlled by means of shutters actuated by MP-5 electromechanisms.

A light signal system indicates to the pilot the beginning or ending of ice formation on the wing.

The temperature of hot air supplied for heating the wing nose section is checked by means of a remote control thermometer.

Wing Anti-Icing System Control

In flight, when the AZP-6 circuit breaker (it.41B) is closed and there is no icing, the ram pressure supplied into the cavity of the ice detector through holes in the wing leading edge causes distension of the ice-detector diaphragm, and the air behind the diaphragm is forced out through a vent in the ice-detector cover.

As a result, the diaphragm rod presses on a microswitch button, keeping the signal lamp circuit open and the lamp (it.119) de-energized.

Under icing conditions the holes in the wing leading edge are blocked with ice, the signal-lamp circuit closes, and the lamp goes on, indicating that wing has begun.

Declassified in Part - Sanitized Copy Approved for Release 2011/12/14 : CIA-RDP80T00246A064200070001-1

Declassified in Part - Sanitized Copy Approved for Release 2011/12/14 : CIA-RDP80T00246A064200070001-1

Hot air is supplied to the wing anti-icing system by 2 ПКН-45 switches (it.2586,4385) controlling the МП-5 electrical mechanisms.

Hot air temperature may be checked by the 2ТУ9 -411 indicator when the АЗР-6 circuit breaker (it.511) is closed.

Engine Anti-Icing System

Engine anti-icing system comprises:

- СО-4А ice detector unit installed in the air duct of the front gear case.

When icing conditions prevail, the ice detector causes the "Icing" [redacted] signal lamp to go on: the lamp is located on the pilots' right instrument panel;

- manual control heating system using air bled from the compressor, designed for heating the inlet guide vanes, the air outlet stub of the КТА-5 unit thermal cartridge, and the pitot tube for the КТА-5 unit, and engine air intake leading edge.

Operation of Compressor Inlet Guide Vanes Icing Signal System

Operation of the electric circuit is described for the No.1 engine, for other engines the circuit operates identically.

The ice detector unit is designed for detection of icing conditions at the engine inlet and to provide a warning signal by energizing a signal lamp (it.1810).

When icing conditions prevail, the diaphragm of the differential pressure gauge closes the contacts energizing the signal lamp(it.1810), and the relay (it.116) which supplies power to heating elements of the ice detector unit.

The heating elements generate heat which acts to thaw the ice.

Declassified in Part - Sanitized Copy Approved for Release 2011/12/14 : CIA-RDP80T00246A064200070001-1

Declassified in Part - Sanitized Copy Approved for Release 2011/12/14 : CIA-RDP80T00246A064200070001-1

De-icing operation finished, the heating elements are de-energized and the signal lamp goes out.

The pilot should keep the inlet guide vanes anti-icing system switched on for the whole period of the intermittent operation of the "Icing" signal lamp.

Operation of Compressor Inlet Guide Vanes and Engine Intake Leading Edge Heating System

With the A3P-6 circuit breaker (it.4482) closed and the switch (it.4475) in the "Open" position, power will be supplied to the MП-5 reversible electromotors (it.5032 and 6553). The electromotor opens the bleed valve by-passing the hot air from engine compressor to compressor inlet guide vanes, to the air outlet stub of the [illegible]-5 unit thermal cartridge, and to the KTA-5 unit pilot tube; the electromotor (it.6553) - to the engine intake leading edge heating. The separation relay (it.6552) prevents the MП-5 electromotors from interconnection in case of one electromotor operating cycle is completed before that of the other electromotor.

Pilot Heads Heating

The TП-156 pilot heads are equipped with heating devices preventing them from frosting during flight in low temperature conditions.

The pilot heads heating devices form an integral part of the head design.

35. Air Conditioning System

The crew cabin air conditioning system proves ventilation with outboard air and pressurization by air bled from the engines, and maintaining the cabin air temperature within the required limits. The cargo compartment air conditioning system provides ventilation with outside air and heating with hot air bled from the engine.

Declassified in Part - Sanitized Copy Approved for Release 2011/12/14 : CIA-RDP80T00246A064200070001-1

Declassified in Part - Sanitized Copy Approved for Release 2011/12/14 : CIA-RDP80T00246A064200070001-1

Engine Air Bleed Control

Placing any of the 2ППИ-45 selector switches (it.2584) in the "Open" position energizes the МП-5 electromotor of the corresponding valve. The valve shutters open and the hot air at a pressure of about 2.2 atm. passes into the main duct from which it may be furnished for cargo compartment and wing heating, and for cabins pressurization.

The switch in the "Closed" position the electromotor closes the shutters of the corresponding valve, and air bleeding from the engine ceases.

Forward Pressure Cabin Air Supply Control

Placing the 2ППИ-45 forward cabin pressurization selector switch in the "Open" position actuates the МП-5 electromotor which opens the shut-off valve, and air from the pressurization duct enters the forward pressure cabin. With the selector switch in the "Closed" position the МП-5 electromotor closes the shut-off valve and pressurization of the forward cabin ceases.

Forward Pressure Cabin Air Temperature Control

The air conditioning system provides manual control of heating and cooling the cabin and automatic control for maintaining the cabin air temperature within the preset limits.

The system comprises: ТРТВК-45М thermostat (it.1120), block relay (it.4325) and МПК-1 electromotor (it.1123).

The thermostat is a unit for selecting the desired cabin air temperature that may be varied from +16 to 23°C, and for automatic maintaining the selected temperature within 2.5°C.

Declassified in Part - Sanitized Copy Approved for Release 2011/12/14 : CIA-RDP80T00246A064200070001-1

Declassified in Part - Sanitized Copy Approved for Release 2011/12/14 : CIA-RDP80T00246A064200070001-1

The МПК-1 electromotor is the system actuator which may be controlled manually or automatically by the thermostat. The relay block is an intermediate unit and serves to connect the corresponding МПК-1 electromotor windings for the system control.

Control of the cabin air temperature is accomplished with a three-position П2НПН-45 selector switch (it.1141) which has a neutral position, two momentary "Warm" and "Cold" positions, and a fixed "Automatic" position.

Toward Cabine Pressure Duct Air Temperature Indicator

To indicate the temperature of air entering the forward pressure cabin from the pressurization system, a ТУ9-48 temperature transmitter (it.519) is installed in the air duct.

The ТУ9-48 indicator (it.520) is installed on the co-pilot's instrument panel.

Cooling Turbine Control

The cooling turbine is switched on by a ПП-45 switch (it.1446) installed on the right instrument panel. With the switch in the "on" position the МПК-1 electromotor (it.1445) is energized and positions the valve shutters so that the cooled air from the air heat exchanger passes to the cooling turbine for additional cooling, and then passes into the cabin pressurization duct.

With the switch in the "Off" position the electromotor positions the shutters so as to divert the air from the cooling turbine. Thus, the air entering the pressure cabin will be cooled in the heat exchanger only.

Declassified in Part - Sanitized Copy Approved for Release 2011/12/14 : CIA-RDP80T00246A064200070001-1

Declassified in Part - Sanitized Copy Approved for Release 2011/12/14 : CIA-RDP80T00246A064200070001-1

Cargo Cabin Heating Control

The cargo cabin heating system is controlled by the flight engineer by the use of the 2ПН-20 switch [illegible]

With the switch in either position, the [illegible] electrical [illegible] the valve shutters so as to open or close the [illegible] the cabin pressurization system to the [illegible].

The air temperature in the cargo cabin [illegible] bleed air flow, i.e. on the position [illegible] operated valve.

Crew Cabin Automatic [illegible]

The АРД-54А crew cabin automatic [illegible] to maintain the cabin pressure within [illegible] the atmospheric pressure. The electric [illegible] provides for transition from normal [illegible] ing, i.e. to reducing the cabin [illegible].

The 438 safety valve is [illegible] ency pressure dumping being switched [illegible] pressure to outside pressure.

36. The Aircraft Lighting [illegible]

Exterior Lighting

The aircraft exterior lighting system comprises:

- ПССО-45 formation lights.
- БАНО-45 wing tip and ХС-39 tail navigation lights;
- ФРС-200 extension landing lights.

Declassified in Part - Sanitized Copy Approved for Release 2011/12/14 : CIA-RDP80T00246A064200070001-1

Declassified in Part - Sanitized Copy Approved for Release 2011/12/14 : CIA-RDP80T00246A064200070001-1

3.

ПСС0-45 Aircraft Formation Lights

The ПСС0-45 lights are used at night or in conditions of poor visibility to facilitate formation flying, forming and maintaining the formation.

For this purpose there are twenty four ПСС0-45 lights installed on the aircraft - twelve lights on the upper surfaces of the wings and the tail-plane, and twelve on the lower surfaces of the wings and the tail-plane.

Switching on and light intensity control of the upper and the lower formation flights is accomplished individually by the use of ПСС0-45 rheostats (its.646 and 655).

БАНО-45 and ХС-39 Navigation Lights

The БАНО-45 and the ХС-39 navigation lights are designed to indicate position and direction of motion of the aircraft in flight and during taxying.

ФРС-200 Extension Landing Lights

The ФРС-200 extension landing lights are designed to light the runway during night operation.

The ФРС-200 landing lights are installed as follows:

- forward L.L. (it.4764) on the pilots' escape hatch;
- starboard L.L. (it.4765) on the starboard landing gear bulge between Fr.Nos.22 and 23;
- port L.L. (it.4766) on the port landing gear bulge between Fr. Nos.22 and 23.

Declassified in Part - Sanitized Copy Approved for Release 2011/12/14 : CIA-RDP80T00246A064200070001-1

Declassified in Part - Sanitized Copy Approved for Release 2011/12/14 : CIA-RDP80T00246A064200070001-1

Circuit Operation

When the 667 switch is placed in the extension position voltage will be applied through the closed limit-switch of the L.L. plug-socket terminal "2" to the L.L. electromotor which will start to extend the light. When the light is extended a limit switch in the extension circuit opens and switches off the electromotor power supply.

At the same time the limit switch in the retraction circuit of the L.L. plug-socket terminal "5" will be closed.

When the 4782 switch is placed in the "instant light" position voltage will be applied to the 664 contactor coil, which operates and connects the light lamp to the aircraft distribution system.

When the 667 switch is placed in the "retraction" position, voltage will be applied through the closed limit switch contacts to the L.L. electromotor which will start to retract the light. When the light is fully retracted the limit switches in the retraction circuit will open and cut off the electromotor power supply.

Operation of the starboard and port landing lights is identical to that of the forward L.L. "short distance" light is used for taxying.

NOTE: During L.L. extension or retraction with the light switch in the "On" position the "instant light" lamp is switched on and off automatically by limit switches installed in the light.

Declassified in Part - Sanitized Copy Approved for Release 2011/12/14 : CIA-RDP80T00246A064200070001-1

Declassified in Part - Sanitized Copy Approved for Release 2011/12/14 : CIA-RDP80T00246A064200070001-1

3.

Interior Lighting

The aircraft interior lighting includes:

- general lighting (white);
- special local ultraviolet lighting;
- crew stations lighting;
- plug sockets for portable lamps.

General lighting (white) consists of П-50, ПС-45 and ПУ-50 plafond lights for lighting the navigator's and pilots' cabins, front and rear luggage compartments, ФОТАБ bays, the main L.G. wells, L.G. locks, cargo cabin, cargo door, toilet, aft compartment and the aft cabin.

The special local ultraviolet spot lighting consists of АРУФОШ-45 and АРУФОШ -50 devices complete with УФ-45 rheostats for switching the devices on and regulating their radiation intensity.

The АРУФОШ-45 and АРУФОШ-50 lighting devices are designed for ultraviolet illumination of the aircraft instrument panels in order to excite luminescence of the substance on the indicator dials and placards in the crew cabin.

The АРУФОШ -45 device may be also used for direct illumination with visible (white) light.

For illumination of the crew stations cabin white lights of the КЛСГК-45, СЛШ-45, СЛШК-53 and ВЛС-45 types are used.

37. Doors And Hatches Warning Circuit

The doors and hatches warning circuit is designed for indicating the closed position of the pilots' escape hatch, forward and rear luggage compartment doors, and the entrance door of the cargo cabin.

The limit switches of the cargo cabin entrance door and the

Declassified in Part - Sanitized Copy Approved for Release 2011/12/14 : CIA-RDP80T00246A064200070001-1

Declassified in Part - Sanitized Copy Approved for Release 2011/12/14 : CIA-RDP80T00246A064200070001-1

3.

luggage compartment doors are connected to the "[redacted] Open" [redacted] warning light (it.7[illegible] installed on the pilots' right instrument panel.

To ensure reliable and correct indication of the [illegible] pilots' escape hatch state two 2531 and 2531a [illegible] connected in parallel to the 5069 "Pilots' hatch open [illegible]" warning light.

38. "Use Oxygen" Signal System

This light and horn signal system serves [illegible] members and passengers of the [illegible].

The signal system comprises [illegible]:

- in the [illegible] compartment;
- in the cargo compartment;
- in the crew cabin;

Circuit Operation

The circuit is prepared for operation [illegible] breaker (it.2352). When the [illegible] by the RV-46 altitude signal device [illegible] close connecting the negative side of the [illegible] to the coils of the 4506, 2[illegible] 4854 condensers.

Voltage from the aircraft power [illegible] the 4854 condenser for charging and to the [illegible] operates and applies the voltage to the [illegible] charging it and to the coil of the 2[illegible] power circuits of the 4506 relay coil. So far as the [illegible] starts to discharge applying power to the 4506 relay coil, the relay

Declassified in Part - Sanitized Copy Approved for Release 2011/12/14 : CIA-RDP80T00246A064200070001-1

3.

remains in the closed position for some time. The closed 5 and 6 terminals of the 2358 relay apply voltage from the aircraft power distributing system to the C-1 horn (it.2356) and through the 4 and 3 terminals of the 2359 relay to the 2360 light which start warning the gunner of the need to use oxygen.

In some time the 4854 condensor discharges, and the 4506 relay 2 and 3 contacts open cutting off power applied to the 2358 relay coil.

A 2361 condensor is connected in parallel to the coil of this relay, which keeps the relay contacts closed. After the 2361 condensor discharges into the coil of the 2358 relay, the 5 and 6 contacts of this relay open cutting off power from the C-1 horn and the warning light. At the same time the 1 and 2 contacts of this relay close, and the 4506 relay coil and the 4854 condensor will be energized again. Further operation of the circuit is identical to presented above. The C-1 horn and the 2360 notice light are energized intermittently at a rate of 100 to 150 times per minute.

The 2354 push-button serves to check that the warning light and horn operate reliably. When the push-button is depressed, voltage from the aircraft distributing system will be applied to the C-1 horn and to the 2369 light through the 5 and 6 contacts of the 2359 relay.

The 2355 push-button serves to cut off the intermittent horn signal after the gunner has begun using oxygen.

Declassified in Part - Sanitized Copy Approved for Release 2011/12/14 : CIA-RDP80T00246A064200070001-1

Declassified in Part - Sanitized Copy Approved for Release 2011/12/14 : CIA-RDP80T00246A064200070001-1

CONTENTS

SECTION 1 INSTRUMENTS .....

1. Instrument Panels and Consoles .....
2. Flight and Navigation Instruments ... [illegible]
3. Barometric Instruments Supply System [illegible]

SECTION II OXYGEN EQUIPMENT 43

4. Units of Oxygen Equipment 43
5. Location of Oxygen Equipment Units.. [illegible]
6. Operation and Technical Data of Oxygen Equipment ..... [illegible]

SECTION III PHOTOGRAPHIC EQUIPMENT 67

7. Installation and Location of Photographic Equipment 67
8. Technical Data of the AMA-[illegible] and AMA-42/75 Cameras 67

SECTION IV RADIO EQUIPMENT 72

9. General Description ..... 7[illegible]
10. 1-PC6-70 Radio Station with [illegible]-70 Medium Wave Unit and PHC Receiver [illegible]
11. PC5-5/230 Radio Command Station with CB6-5 Medium Wave Unit and [illegible]C-8 Receiver ..... 7[illegible]
12. PCMV-4 UHF Command Radio Set ..... 8[illegible]
13. [illegible]-50 "Материк" Instrument Landing System 89
14. Aircraft Interphone System 93
15. APK-5 Automatic Direction Finder ... 97
16. [illegible]-2 Low Altitude Radio Altimeter... 105

Declassified in Part - Sanitized Copy Approved for Release 2011/12/14 : CIA-RDP80T00246A064200070001-1

Declassified in Part - Sanitized Copy Approved for Release 2011/12/14 : CIA-RDP80T00246A064200070001-1

17. РБП -3 Panoramic Radar 103

18. ОРО-1 Airborn Radio Responder "Барий-М" 110

19. "Гамма-54Т " "Radar Range Meter 112

20. " Сирена-2 " Radar Station 120

21. АВРА-45 Search and Rescue Radio Station 133

SECTION V AIRCRAFT BONDING 138

SECTION VI ELECTRICAL EQUIPMENT 142

22. General Description 142

23. Direct Current Power Sources 147

24. D.C. Power Distribution System ... 156

25. A.C. 36 v 400 cps Power System ... 157

26. A.C. 115 v 400 cps Power Supply .. 158

27. Starting System for АИ-20 Engines 161

28. Aircraft Fuel System 172

29. ОСП-2А Fire-Extinguishing System 184

30. Fuel Tanks Purge System 189

31. АВ-68И Propeller Feathering Control Electric Circuit 190

32. Trim-Tab Control System 200

33. Landing Gear and Flap System 202

34. Electrical De-icing and Heating System 209

35. Air Conditioning System 217

36. Aircraft Lighting Equipment 220

37. Doors and Hatches Warning Circuit 223

38. "Use Oxygen" Signal System 224

Declassified in Part - Sanitized Copy Approved for Release 2011/12/14 : CIA-RDP80T00246A064200070001-1

Declassified in Part - Sanitized Copy Approved for Release 2011/12/14 : CIA-RDP80T00246A064200070001-1

S
25

FLIGHT OPERATING INSTRUCTIONS

FOR

AH-12 AIRCRAFT POWERED BY
FOUR AH-20 TURBOPROP ENGINES

024011

Declassified in Part - Sanitized Copy Approved for Release 2011/12/14 : CIA-RDP80T00246A064200070001-1

Declassified in Part - Sanitized Copy Approved for Release 2011/12/14 : CIA-RDP80T00246A064200070001-1

FLIGHT OPERATING INSTRUCTIONS

for

AN-12 AIRCRAFT POWERED BY

FOUR AI-20 TURBOPROP ENGINES

Declassified in Part - Sanitized Copy Approved for Release 2011/12/14 : CIA-RDP80T00246A064200070001-1

Declassified in Part - Sanitized Copy Approved for Release 2011/12/14 : CIA-RDP80T00246A064200070001-1

The instructions are intended for flying personnel familiar with the [illegible] aircraft powered by AI-20 turboprop engines.

The instructions contain brief information on the aircraft, powerplant and special equipment, main parameters which ensure their reliable operation, and the actions of the crew in flight.

Declassified in Part - Sanitized Copy Approved for Release 2011/12/14 : CIA-RDP80T00246A064200070001-1

Declassified in Part - Sanitized Copy Approved for Release 2011/12/14 : CIA-RDP80T00246A064200070001-1

S E C T I O N I

BRIEF INFORMATION ON AIRCRAFT AND OPERATING LIMITATIONS.

The AH-12 aircraft is designed for carrying the cargoes, military equipment and troops.

The equipment installed in the aircraft permits flying in all weather conditions, to land on unprepared airfields, and on airfields equipped for instrument landing.

The aircraft landing gear permits performing take-off and landing on soft surface runways.

I. MAIN PERFORMANCE

(under standard conditions)

Take-off run ..... 835 m.

Landing run (versus landing weight) ..... 760-1,000 m.

Landing speed (versus landing weight) ..... 205-218 km./hr.

Max. take-off weight ..... 54,000 kg.

Max. landing weight ..... 50,000 kg.

Operational C.G. position data:

forward C.G. limit ..... 16% MAC

aft C.G. limit ..... 32% MAC

II. AERODYNAMIC DESIGN

The AH-12 aircraft is a high wing monoplane with high lift-to--drag ratio, good stability and controllability in all flight conditions within the range of operating altitudes and C.G. positions. The design ensures reliable operation of the propellers and engines when the aircraft is operated from soft surface airfields.

Declassified in Part - Sanitized Copy Approved for Release 2011/12/14 : CIA-RDP80T00246A064200070001-1

Declassified in Part - Sanitized Copy Approved for Release 2011/12/14 : CIA-RDP80T00246A064200070001-1

To increase flying safety at take-off and cruising, the aircraft is provided with the automatic propeller feathering system which automatically feathers the propeller blades in the event of failure of an engine operating at 0.7 normal rating or higher (when the engine power decreases below 0.7 normal rating).

Wing critical angle of attack (stalling angle) ..... 17.5°

Wing angle of attack at take-off run with flaps 25° deflected ..... 5.6°

Landing angle of attack ..... 8°

Lift-to-drag ratio (with L.G. down and flaps 25° deflected) 7.52

3. OPERATING LIMITATIONS

A. AIRCRAFT

1. Never take-off with the propellers in the "PROP. PITCH STOP RELEASED" position.

2. Never take-off and land with a cross wind at 90° to the runway and wind speed exceeding 10 m./sec.

3. Determine max. permissible air speeds basing on:

a) max. permissible dynamic pressure (momentarily when gliding with limited maneuverability) ..... 1,800 kg./cm.^{2};

b) max. permissible Mach number of 0.7;

c) max. permissible level flight IAS .... 610 km./hr.

4. Max. permissible IAS:

- with flaps 35° extended ..... 300 km./hr.;
- with L.G. down and flaps retracted ..... 350 km./hr.;
- with L.G. down and flaps 25° extended... 340 km./hr.

5. Max. operating overload, when flying the aircraft 2.2

Declassified in Part - Sanitized Copy Approved for Release 2011/12/14 : CIA-RDP80T00246A064200070001-1

Declassified in Part - Sanitized Copy Approved for Release 2011/12/14 : CIA-RDP80T00246A064200070001-1

6. Min. indicated stalling speed with L.G. and flaps retracted and engines running with fuel control levers at 84° indicated by the PT-2 indicator;

a) at an altitude of 5,000 m. ..... 210 km./hr.

b) at an altitude of 8,000 m. ..... 220 km./hr.

IAS should not be lower than:

280 km./hr. - at an altitude up to 6,000 m.;

300 km./hr. - at an altitude above 6,000 m.

7. Max. bank angles, when turning the aircraft... not more than 30°.

Recommended bank angles:

- for visual flying ..... not more than 30°;
- for instrument flying ..... 15-20°.

B. E N G I N E

1. Never switch on the "FLIGHT RESTART" switch, when starting the engine on the ground.

2. Never rotate the propeller against the direction of normal rotation to prevent damage to the starter-generators drives.

3. The engine is allowed to run momentarily at a speed not more than 13,329 r.p.m. (105%) when restarting the engine in flight and not more than 13,260 r.p.m. (103%) when testing the engine for acceleration.

4. Stop starting the engine on the ground or in flight, if during the starting procedure the oil pressure does not increase to 3 kg./cm.^{2}.

5. Stop starting the engine on the ground if:

- at starting the gas temperature past the turbine exceeds 750°C, with the fuel by-pass button applied;
- 25 sec. after pressing the starting button the fuel is not ignited;

Declassified in Part - Sanitized Copy Approved for Release 2011/12/14 : CIA-RDP80T00246A064200070001-1

Declassified in Part - Sanitized Copy Approved for Release 2011/12/14 : CIA-RDP80T00246A064200070001-1

- the engine fails to attain an idle speed of 10,400±200 r.p.m. 9.5-82.5%) 2 min. after pressing the starting button;

- the voltage in the electrical system drops below 16 V.;

- the starter-generator fails to cut out in 70 sec.

6. It is allowed to make 5 attempts to start one engine with intervals between startings not less than 3 min.

The fifth starting attempt should be followed by an interval not ss than 30 min. to cool the starter-generators.

7. At an outside air temperature of -25°C or below, before the st starting heat the engine with hot air having a temperature not ceeding 80°C.

8. At an outside air temperature below -40°C, beside heating, ll the engine with hot oil having a temperature of 70 to 80°C. After opping the engine drain the oil from the oil tank, oil cooler and gine.

At low outside air temperatures, (+5 -5°C) and a high air humidity e may form in the engine air intake duct when the engine is running. der these conditions switch on the ice detector before starting.

9. Permissible exhaust gas temperatures past the turbine:

- at take-off from any airfield (take-off engine rating):

a) at an outside air temperature of +15°C or below ..... 470°;

b) at an outside air temperature above +15°C.. 520°;

- in flight up to the service ceiling:

a) take-off rating ..... 470°;

b) normal rating ..... 440°;

c) at normal rating ..... 420°.

The exhaust gas temperature past the machine is given at an outside air temperature under ISA conditions. If the outside air tempera-

Declassified in Part - Sanitized Copy Approved for Release 2011/12/14 : CIA-RDP80T00246A064200070001-1

Declassified in Part - Sanitized Copy Approved for Release 2011/12/14 : CIA-RDP80T00246A064200070001-1

- the engine fails to attain an idle speed of 10,400±200 r.p.m. (79.5-82.5%) 2 min. after pressing the starting button;

- the voltage in the electrical system drops below 16 V.;

- the starter-generator fails to cut out in 70 sec.

6. It is allowed to make 5 attempts to start one engine with intervals between startings not less than 3 min.

The fifth starting attempt should be followed by an interval not less than 30 min. to cool the starter-generators.

7. At an outside air temperature of -25°C or below, before the first starting heat the engine with hot air having a temperature not exceeding 80°C.

8. At an outside air temperature below -40°C, beside heating, fill the engine with hot oil having a temperature of 70 to 80°C. After stopping the engine drain the oil from the oil tank, oil cooler and engine.

At low outside air temperatures, (+5 -5°C) and a high air humidity ice may form in the engine air intake duct when the engine is running. Under these conditions switch on the ice detector before starting.

9. Permissible exhaust gas temperatures past the turbine:

- at take-off from any airfield (take-off engine rating):

a) at an outside air temperature of +15°C or below ..... 470°;

b) at an outside air temperature above +15°C.. 520°;

- in flight up to the service ceiling:

a) take-off rating ..... 470°;

b) [illegible] ..... 440°;

c) [illegible] ..... 420°.

[illegible] the turbine is given at an out- [illegible] If the outside air tempera-

Declassified in Part - Sanitized Copy Approved for Release 2011/12/14 : CIA-RDP80T00246A064200070001-1

Declassified in Part - Sanitized Copy Approved for Release 2011/12/14 : CIA-RDP80T00246A064200070001-1

ure differs ±1°C from SA the permissible gas temperature past the urbine changes ±1°C respectively.

10. The following quantity of air is permitted to be bled for:

- the aircraft pressurized cabins system, within the entire range f flying altitudes at 0.2 normal rating to take-off rating ncluded ..... not more than 0.22 kg./sec.

- the aircraft de-icing systems at normal rating below ..... not more than 0.13 kg./sec.

NOTE: While on the ground and at take-off, under icing conditions it is allowed to switch on the de-icing system at any rating. The cabin pressurization system and the de-icing system should bleed air in quantities not exceeding the above values.

Permissible time of the engine continuous operation:

a) at take-off rating - not more than 15 min., the total engine e at this rating should not exceed 4% of the engine service life;

b) at normal rating - not limited, the total engine time should exceed 32% of the engine service life;

c) at rating corresponding to 74° or below indicated by the YUPT-2 fuel control lever position indicator - not limited;

d) at idle rating (0° by the YUPT-2 fuel control lever position indicator) - not more than 30 min.

NOTE: When calculating the engine time, the engine ratings with fuel control lever set at 75° to 89° by the YUPT-2 indicator are considered as normal rating, 89° or above - as take-off rating.

Declassified in Part - Sanitized Copy Approved for Release 2011/12/14 : CIA-RDP80T00246A064200070001-1

Declassified in Part - Sanitized Copy Approved for Release 2011/12/14 : CIA-RDP80T00246A064200070001-1

SECTION II

PREPARING THE AIRCRAFT FOR FLIGHT

I. PRE-FLIGHT INSPECTION OF AIRCRAFT BY CAPTAIN (PILOT)

Before flight the crew must inspect the aircraft and check its [illegible] for flight.

[illegible] received the flight engineer's report about the aircraft [illegible] for flight in accordance with the [illegible], the captain must [illegible] the aircraft.

2. EXTERIOR INSPECTION OF AIRCRAFT

Perform inspection, completing the circuit about the aircraft [illegible] as follows:

1. The cockpit glazing (for condition [illegible]).

2. The [illegible], [illegible] antennas and [illegible] antenna fairing for condition.

Examine from the ground the antennas of the [illegible]-70, PCB-5 [illegible] sets and APK-5 automatic direction finders Nos.1 and 2 on the [illegible] of the fuselage nose section for condition.

[illegible] sure that the protective caps are removed from the [illegible]-5 [illegible] tracker, the [illegible]-I sextant sight head and [illegible] the identification radio antennas for condition.

3. Check the pilots' emergency exit door for condition and its [illegible] for close fitness; check the position of the mechanical indicator (which should be flush with the skin).

4. The [illegible] L.G. inspection:

- check the compression of the shock strut (170-200 mm.) and [illegible] tyres ([illegible]-45 mm.);

Declassified in Part - Sanitized Copy Approved for Release 2011/12/14 : CIA-RDP80T00246A064200070001-1

Declassified in Part - Sanitized Copy Approved for Release 2011/12/14 : CIA-RDP80T00246A064200070001-1

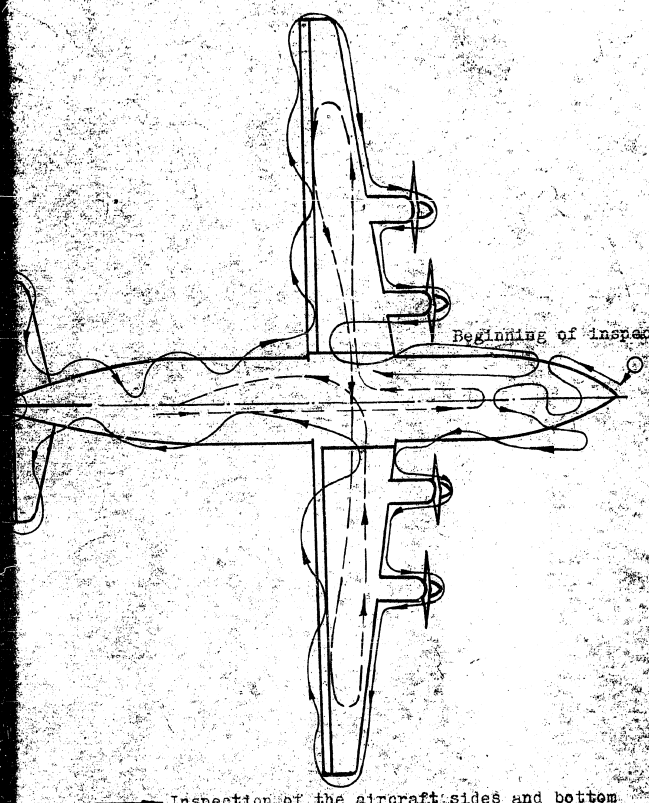

——► Inspection of the aircraft sides and bottom

——►——► Inspection of the aircraft top

Fig. 1. Aircraft external inspection

Declassified in Part - Sanitized Copy Approved for Release 2011/12/14 : CIA-RDP80T00246A064200070001-1

Declassified in Part - Sanitized Copy Approved for Release 2011/12/14 : CIA-RDP80T00246A064200070001-1

- check the condition of the wheel tyres and their shift relative the wheels (to the red mark);
- see that the shock strut sealing is free from leaks;
- inspect the shimmy damper for condition;
- make sure that the shock strut down lock is closed, and the up lock is opened;
- examine the limit switches and wiring for condition;
- check the nose L.G. steering control cables and mechanism for condition;
- see that the nose L.G. doors are closed and no clamp is on the down lock.

5. Examine the nose landing light for condition.

6. Check to see that the starboard pitot tube and static holes are in good condition, that the cover and plugs are removed.

7. Examine the starboard front portion of the fuselage skin for freedom from damages (dents, cracks, sheared rivets).

8. Make sure that the forward cargo compartment door is closed.

9. See that plugs are removed out of the air intakes of the vent, ng heating and PH-600 voltage regulator blast systems.

10. The R.H. engines (Nos. 3 and 4) inspection:

- examine the propeller blades and the propeller spinners for free- from damages and dents, make sure that the propeller blades are at $\varphi = 0$;
- see that shields are removed from the engine air intakes and jet es, oil cooler ducts and generators blast air intakes;
- make sure that the engine cowling latches are closed and safa- d;
- examine the engine cowlings for no leakage of oil, fuel and hyd- lic fluid.

Declassified in Part - Sanitized Copy Approved for Release 2011/12/14 : CIA-RDP80T00246A064200070001-1

Declassified in Part - Sanitized Copy Approved for Release 2011/12/14 : CIA-RDP80T00246A064200070001-1

11. Right wing inspection:

- examine the wing skin for damage and the wing lower surface for leakage;
- see that the hinged panels locks are closed;
- inspect the static dischargers and navigation lights on the wing outer panel for damage;
- see that the trim tab is not damaged and set in the neutral position;
- see that the flaps are not damaged and closely fit to the wing edge;
- see that the vent system air intake is not closed with a shield.

12. Right main L.G. and well inspection:

- check the shock strut for condition and compression (220-275mm.);
- check the wheel tyres for condition and reduction (70-85 mm.);
- see that the wheel tyres are not shifted (relative to the marks);
- check that the L.G. legs are securely locked in the down position (the lock should be closed), the Up lock should be opened;
- examine the limit switches for condition;
- inspect the brake cylinders and brake system hoses for hydraulic fluid leakage;
- see that the locks, hinges and telescopic rod of the L.G. down lock control are not dirty;
- check the skid detector for security of attachment and their wiring for condition;
- inspect the L.G. well for freedom from foreign objects;
- check the L.G. doors for close fitness;
- see to be sure that the units, pipelines and cylinders of the hydraulic system are free from hydraulic fluid leakage;
- see that the aircraft grounding cable is removed.

Declassified in Part - Sanitized Copy Approved for Release 2011/12/14 : CIA-RDP80T00246A064200070001-1

Declassified in Part - Sanitized Copy Approved for Release 2011/12/14 : CIA-RDP80T00246A064200070001-1

13. Make sure that the bomb doors, access doors to accumulators and ler points are closed.

14. Examine the inner [illegible] bomb shackles for condition.

15. Check the landing light for condition.

16. Make sure that chocks are placed around the aircraft wheels.

17. The fuselage starboard side inspection:

examine the skin and fuselage window panels for damage;

see that the rear cargo compartment door is closed;

make sure that when closed the cargo door panels closely fit the edging;

see that the flare magazines contain flares;

inspect the PCB-5 and PCB-70 radio antennas for condition;

see that the bomb doors are closed;

see that the OCY-5 and OC-8M bottles discharge bursting disks are available.

18. The tail unit inspection:

examin the lower skin of the stabilizer, fin and rudder for damage;

make sure that the elevator, rudder and the trim tabs are free from dirt, ice and snow;

see that the trim tabs are in the neutral position.

19. Check the condition of the PB-2 radio altimeter antennas, static dischargers, glasses of the wing tips and the tail navigation lights.

20. Examin the tail cabin glazing for condition.

21. See that the tail gun installation is not covered.

22. See that the emergency escape door is closed.

23. Come to the aircraft port side and examine:

the [illegible] section of the fuselage;

the left wing;

the left engines (Nos. 1 and 2);

the [illegible] L.G. leg;

the [illegible] section of the fuselage.

Declassified in Part - Sanitized Copy Approved for Release 2011/12/14 : CIA-RDP80T00246A064200070001-1

Declassified in Part - Sanitized Copy Approved for Release 2011/12/14 : CIA-RDP80T00246A064200070001-1

Inspect the fuselage port side and in a similar way to the aircraft starboard side. Besides, check to see that the shields are removed from air-to-air heat exchanger intake.

After inspecting the aircraft the captain (pilot) checks that the deflection of the rudder, elevator, ailerons and trim tabs correspond to that of the proper controls (by deflecting the control surfaces to extreme positions). When checking, the captain should stand at the aircraft, and the co-pilot - in the cockpit. The controls are operated either from the pilot's or co-pilot's seat. The co-pilot must check the trim tabs controls both from the left and from the right seats. After checking the trim tabs control system, set the trim tabs in the neutral position.

B. INTERIOR INSPECTION OF AIRCRAFT CABINS AND COMPARTMENTS

1. Examine the pressurized cabin and cargo compartments to make sure that:

- the cabin roof panels are closed;
- the fire-extinguishers are charged and installed in place;
- the cabin is free from foreign objects;
- the emergency escape doors are closed;
- the instrument panels are securely attached;
- all the instruments are in proper condition and their pointers are in the initial position;
- the cockpit canopy window panels are free from damages, their surfaces are clean, the windscreen wipers are installed and in good condition;
- the seats are in proper condition;

2. Prepare the parachute, place it in the seat bucket, connect the oxygen mask to the oxygen regulator hose.

3. Occupy the seat, put on the parachute harnesses (fasten the lock),

Declassified in Part - Sanitized Copy Approved for Release 2011/12/14 : CIA-RDP80T00246A064200070001-1

Declassified in Part - Sanitized Copy Approved for Release 2011/12/14 : CIA-RDP80T00246A064200070001-1

asten the safety belts and knock:

- the seat and rudder pedals adjustment for height;
- the safety belts for condition and locking;
- the AG-[illegible] autopilot control hand grip for condition.

4. Unlock the aircraft control surfaces and the engine power control levers, set the lock lever in the extreme rear position and make sure that it is secured by the catch. Check the deflection and free movement of all the flight controls, and smooth travel of the engine power control levers; make sure that they are secured by the trip catch.

5. Examine the fuselage port side and the port console to make sure that:

- the selector valve of the pilot's instruments supply from the static and dynamic lines is in the [illegible] position, the valve of the auxiliary static line - "OFF" (all the valves should be locked);
- the oxygen equipment is ready for flight, the pressure indicated the pressure gauge is normal (8-10 k./cm.).
- the navigation and formation lights are OFF;

[illegible]

- the cockpit canopy small window easily opens and closes;
- the rheostats of the U.V. lights and white lights are OFF;
- the flap control lever is in the neutral position and locked;
- the engines cut-out valve switches are set in the "OPEN" position;
- the propeller flight-fine-pitch hydraulic stop control switches in the "PROP.PITCH STOP RELEASED" position;
- the engine power control levers are in the extreme rear position by the УПРТ-2 fuel control lever position indicator);
- the L.C. control lever is in the "NEUTRAL" position and locked;
- the elevator trim tab control wheel rotates without sticking; er that set it in the neutral position;

Declassified in Part - Sanitized Copy Approved for Release 2011/12/14 : CIA-RDP80T00246A064200070001-1

Declassified in Part - Sanitized Copy Approved for Release 2011/12/14 : CIA-RDP80T00246A064200070001-1

- the "FLIGHT RESTART" switches are off.

6. On the pilot's instrument panel:

- check to see that emergency power supply from the batteries is
f;

- see that the window heater switch is off;

- visually inspecting the pilot's instrument panel from left to
ght and from top to bottom check the instruments for condition;

- make sure that the AIB-2 artificial horizon, ЭУИ-53 turn and
k indicator, ГМК-1М gyro flux-gate compass and the RB-2 radio al-
meter are switched off;

- check the emergency bomb and cargo release switches are off
eir caps are closed and the warning lights are out);

- check to see that the parking brake is applied;

- make sure that the "POWER" switch on the autopilot control panel
in the "OFF" position.

7. On the centre instrument panel:

- switch on the anti-skid control;

- make sure that the hydraulic system fuel supply switch is off,
sed with a cap and locked;

- make sure that the landing lights control switches are off;

- make sure that the hydraulic reservoirs contain 20±3 litres of
id when the hydraulic accumulators are charged up to a pressure of
-150 kg./cm.^{2} and when the hydraulic accumulators are not charged the
t reservoir is filled with 27+2 litres of fluid and the right one -
with 25+2 litres;

- visually inspect the engine instruments for condition;

- check the fuel system control panel and ensure that the fuel
k group selector switch is in the "NEUTRAL" position;

- make sure that the aircraft is properly fuelled according to the
k list and fuel flowmeter readings;

Declassified in Part - Sanitized Copy Approved for Release 2011/12/14 : CIA-RDP80T00246A064200070001-1

Declassified in Part - Sanitized Copy Approved for Release 2011/12/14 : CIA-RDP80T00246A064200070001-1

- make sure that the aircraft is pro[illegible] with oil by observing the oil contents gauge readings (50 litres).

3. Connect the external power supply [illegible], [illegible] and to switch on the circuit breakers and, with the circuits energized, check that:

- the trim tabs of the rudder and [illegible] in the neutral position (the neutral position warning [illegible]);

- the pilots' emergency [illegible] in the neutral position and locked, the door is [illegible] the warning [illegible] is [illegible];

- the nose L.G. steering hand wheel is fully suppressed (the light [illegible] out);

- the L.G. warning system is in proper condition and the oil cooling shutters are in normal position.

4. On the fire-extinguishing control panel:

- switch on the fire-extinguishing system [illegible];

- set the fire-extinguishing system switch in the [illegible] position, [illegible] the condition of the cartridges circuit and readiness of the [illegible] fire-extinguisher by observing the warning [illegible] (the amber [illegible] are illuminated);

- make sure that the "NEUTRAL GAS" switch is off [illegible] with [illegible];

- make sure that the fire-extinguishers control buttons are closed [illegible] caps and locked;

- see that the engine fuel shut-off valves are opened (the green [illegible]hts are illuminated).

2. PRE-FLIGHT INSPECTION OF AIRCRAFT BY CO-PILOT

When performing the pre-flight inspection of the aircraft the [illegible]ilot must:

Declassified in Part - Sanitized Copy Approved for Release 2011/12/14 : CIA-RDP80T00246A064200070001-1

Declassified in Part - Sanitized Copy Approved for Release 2011/12/14 : CIA-RDP80T00246A064200070001-1

1. Check the quantity, distribution (according to the given centre ...vity data) and reliable attachment of cargoes intended for transportation.

2. Examine the cargo compartment and the cargo attendants' cabin, ...ck the warning and heating panels, make sure that the cargo door is ...curely closed.

3. By observing the liquid oxygen gauge indicator make sure that sufficient oxygen contents is provided and the oxygen is supplied ...perly.

4. Report the captain about the inspection results and prepare his ...tion for flight, to do this:

- check the seat and safety belts for condition;
- place the parachute into the seat bucket;
- occupy the seat, put on the parachute harness /fasten the lock/, ...ten the safety belts;
- adjust the seat and the rudder pedals for height.

5. Together with the flight engineer check the fuel contents in the ...s in accordance with the fuelling list, check the reading of the flowmeter scales; check the oil contents (50 litres indicated by oil contents gauge).

6. Examine the instrument panel for the condition of the instruments.

7. Make sure that:

- the АГБ-2 artificial horizon, ЭУП-53 turn-and-bank indicator ...РВ-2 radio altimeter are off;
- the cargo compartment ventilating shutter is open; the cargo com...ment heating valve is closed;
- the emergency decompression switch is off and closed with a cap;
- the engine air bleed valves and the forward pressurized cabin ...upply valve are closed;
- the clock, Pitot tube, windows, propellers, spinners, cooling

Declassified in Part - Sanitized Copy Approved for Release 2011/12/14 : CIA-RDP80T00246A064200070001-1

Declassified in Part - Sanitized Copy Approved for Release 2011/12/14 : CIA-RDP80T00246A064200070001-1

turbine, neutral gas and guide vanes assembly heaters switches are off.

8. Make sure that the cabin pressurization system three-position switch is off.

9. Examine the starboard console and ensure that:

- the trim tabs of the ailerons and rudder are in the neutral position (the lights are illuminated);

- the elevator trim tab control wheel rotates without sticking, after that set it in the neutral position;

- the engine power control levers move freely and smoothly, after that set them in the extreme rear position (0° by the УПТ-2 fuel control lever position indicator);

- L.G. main system control valve is in the neutral position and locked;

- the engine cut-out valves are in the "OPEN" position (the guard cover is closed);

- the L.G. emergency control valve is in the neutral position and locked;

- the flap control valve is in the neutral position and locked;

- the cockpit pressurization system valve is on (the pressure gauge indicates zero);

- the engine air bleed switches are off;

- the emergency escape door control valve is in the neutral position and locked, the equipment is ready for flight, the pressure by the pressure gauge is normal (8-10 kg./cm^2).

10. Check the СПУ-7 intercommunication system operation.

11. To check the operation of the РСИУ-4П radio Nos.1 and 2, do as follows:

- give the command to the radio operator: "Switch on the power supply circuit breaker for the radio set to be checked";

Declassified in Part - Sanitized Copy Approved for Release 2011/12/14 : CIA-RDP80T00246A064200070001-1

Declassified in Part - Sanitized Copy Approved for Release 2011/12/14 : CIA-RDP80T00246A064200070001-1

- set the selector switch on the SRV-7 ICS control box for the radio station to be checked;

- obtain two-way communication with the airfield traffic control tower via all channels.

3. PREPARING THE ENGINES FOR STARTING

Start the engine from a special external D.C. power supply source, 24 V., 22-25 kW, and also from aircraft batteries and the generators with the engines running.

When preparing the engines for starting, the captain (or the flight engineer) must:

1. Make sure that the propeller disc areas are free from obstructions, the observer and ground crew are in their places, the entrance doors, bomb doors, doors for the crew members and cargo doors are closed.

2. Give the command to connect the external power supply source, make sure that the generator is connected to aircraft electrical system receptacle No.1 and batteries - to aircraft electrical system receptacle No.2, check that the voltage is 28.5 V.

3. See that the engine instruments and control units circuit breakers are ON.

4. Give the command to the flight engineer "Make up pressure in the left hydraulic system" and apply the parking brake.

5. Ensure that the aircraft control surfaces and the engine power control levers are unlocked, by operating the rudder pedals hold the rudder in the neutral position or in one of the extreme positions.

6. See that the propeller fine-pitch stop control switches are in the "PROP.PITCH STOP RELEASED" position.

7. Check and prepare the aircraft fire-extinguishing system for operation in accordance with the fire-extinguishing system operation instruction (Section X).

Declassified in Part - Sanitized Copy Approved for Release 2011/12/14 : CIA-RDP80T00246A064200070001-1

Declassified in Part - Sanitized Copy Approved for Release 2011/12/14 : CIA-RDP80T00246A064200070001-1

8. Ensure that the ground crew is ready for starting the engines, for accomplishing communication one of the ground crew members in [illegible] the sight of the person who starts the engine.

9. Ask the airfield traffic control tower for permission to start engines and give the command to the flight engineer to prepare for [illegible]rting the engines. At this command the flight engineer performs the [illegible]rations given in paragraphs 10-[illegible]. Switch on the batteries "for [illegible]rt".

10. Switch on the aircraft fuel booster pumps.

11. Open the shut-off valves. Check the fuel pressure by the ДИМ-3 pressure gauges.

12. Check the engine cut-out valves for opening.

13. Set the "GROUND-AIR" switches in the "GROUND" position.

14. Set the engine power control levers in the "GROUND IDLE" (fully [illegible] 4° by the УПРТ-2 fuel control lever position indicator).

15. Set the "ENGINE SELECTOR" switch for the engine selected for [illegible]ting.

16. Set the "ENGINE COLD ROTATION-START" switch in the "START" [illegible]tion.

17. If the propeller is braked, release the propeller brake.

18. Check the system readiness for starting by the "READY TO START" [illegible]ing light illumination.

When preparing the engines for starting, the co-pilot must ensure [illegible] that the engine air [illegible] switches are in the "OFF" position.

The [illegible] must proceed in accordance with the instruc[illegible] the pilot [illegible] the electrical system readiness for [illegible]

[illegible]

A. STARTING [illegible]

[illegible] starting is accomplished by [illegible] or the flight [illegible] as follows:

Declassified in Part - Sanitized Copy Approved for Release 2011/12/14 : CIA-RDP80T00246A064200070001-1

Declassified in Part - Sanitized Copy Approved for Release 2011/12/14 : CIA-RDP80T00246A064200070001-1

1. After receiving the airfield air traffic control tower permission for starting the engines, address the observer: "The parking brake is applied, the hydraulic system pressure is normal, the aircraft electrical system voltage is normal, I'm starting (names the number of the engine to be started), clear off the propellers". Having received the answer: "The propellers are clear", press and after 1-2 sec. release the "ENGINE START" button. After pressing the engine starting button, the engine must develop a speed of 10,400 ±200 r.p.m. (79.5-82.5%) for a period not exceeding 120 sec.

2. When starting the engine, check that:

- the gas temperature past the turbine does not exceed 750°C;
- the engine smoothly gains the speed up to 10,400 r.p.m. (79.5-82.5%), otherwise stop starting the engine;
- the engine inlet oil pressure increases up to 3 kg./cm.^{2};
- the fuel pressure 15-17 sec. after pressing the "ENGINE START" button should be within 7-10 kg./cm.^{2}

When starting, short flames of fire may appear from the jet pipe.

3. If the gas temperature past the turbine intensively increases (at 20-25% r.p.m.) the temperature reaches 600-650° and continues increasing) use the fuel by-pass button to prevent the temperature increase above 750°C.

Repeatedly press the fuel by-pass button until the gas temperature ceases or decreases, with the engine r.p.m. increasing.

NOTE: In case of proper adjustment, the engine is started without by-passing the fuel.

4. If, when using the fuel by-pass button, the temperature rises to 750°C, stop starting the engine. To do this, set the engine cut-off switch in the "CLOSED" position and switch off the airfield generator by pressing the "STOP STARTING" button. After completely stopping

Declassified in Part - Sanitized Copy Approved for Release 2011/12/14 : CIA-RDP80T00246A064200070001-1

Declassified in Part - Sanitized Copy Approved for Release 2011/12/14 : CIA-RDP80T00246A064200070001-1

engine, set the engine cut-out switch in the "OPEN" position and
er 3 min. repeat starting.

NOTE: All the operations to prepare the engine for starting are accomplished by the crew member who is to start the engine. The engines are started in a definite sequence beginning with the left outboard engine.

5. If the engine failed to be started, when fuel supplied to the ine is not ignited, start the engine only after cooling it by cold ation from the starter-generators.

6. To start the next engine, set the selector switch for this ine and accomplish the starting employing the above procedure.

NOTE: At an outside air temperature above +25°C set the oil cooler ejector valve selector switch in the "OPEN" position. Use the oil cooler ejector system only at idle speed and 0.2 normal rating. When changing for higher engine ratings, switch off the system.

ENGINE STARTING PROCEDURE AFTER PRESSING THE STARTING BUTTON

1. The starter-generators begin to operate being supplied through the ting resistors which ensure low starting current and the igniter s start operating.

2. At the 4-th second the starting resistors are shunted and the rter-generators are connected directly to the power supply circuit.

3. At the 9-th second the PYT-600 starter-generator power re- tors start operating, which results in increasing the starters m. and supplying the starting fuel.

4. At the 15-th second the starter-generators are switched over to power supply, the fuel cut-out valve is de-energized and the fuel control unit begins supplying fuel to the main fuel nozzles. The PYT-600 starter-generator power regulators are switched off.

Declassified in Part - Sanitized Copy Approved for Release 2011/12/14 : CIA-RDP80T00246A064200070001-1

Declassified in Part - Sanitized Copy Approved for Release 2011/12/14 : CIA-RDP80T00246A064200070001-1

5. At the [illegible]-th second the [illegible]-600 starter-generators power regu-
s start operating again.

6. At the 25-th second the ignition system is switched off and the
ing fuel supply is cut out; the operating fuel burns. If the ope-
g fuel is not ignited, stop starting the engines.

7. When the engine attains 4,500-6,400 r.p.m. (35-50%) the starter-
rators are switched off by the [illegible] hydraulic pressure switch.
0 sec. after starting, the engine does not attain 4,500 r.p.m.
the starter-generators are switched off by the [illegible]-75 engine
ing programmer. If the starter-generators are not switched off at
r.p.m. (50%), switch then off by the "STOP STARTING" button. Check
tarter-generators switching off by the voltage increase.

8. At 9,000±150 r.p.m. (70-71%) the valves releasing the air pres-
after the VIII-th stage of the engine compressor close.

9. After starting all the engines switch-over to the power supply
the aircraft electrical system and give a command to disconnect the
nal power supply sources.

5. WARMING-UP, TESTING AND STOPPING THE ENGINES

Warm up the engines at idle speed rating till the engine inlet oil
erature reaches 40°C.

After warming-up, check the operation of the engines, propellers,
rators, hydraulic systems, cabin pressurization and heating systems
ecordance with the chart (Fig.2).

NOTE: As a rule, warming up and testing of engines is accomplish-
ed by the flight engineer, when preparing the aircraft for
flight.

To warm up the propeller pitch control hydraulic mechanism with oil
warming-up the engine, change twice its rating from idle to 0.6
nal.

Declassified in Part - Sanitized Copy Approved for Release 2011/12/14 : CIA-RDP80T00246A064200070001-1

Declassified in Part - Sanitized Copy Approved for Release 2011/12/14 : CIA-RDP80T00246A064200070001-1

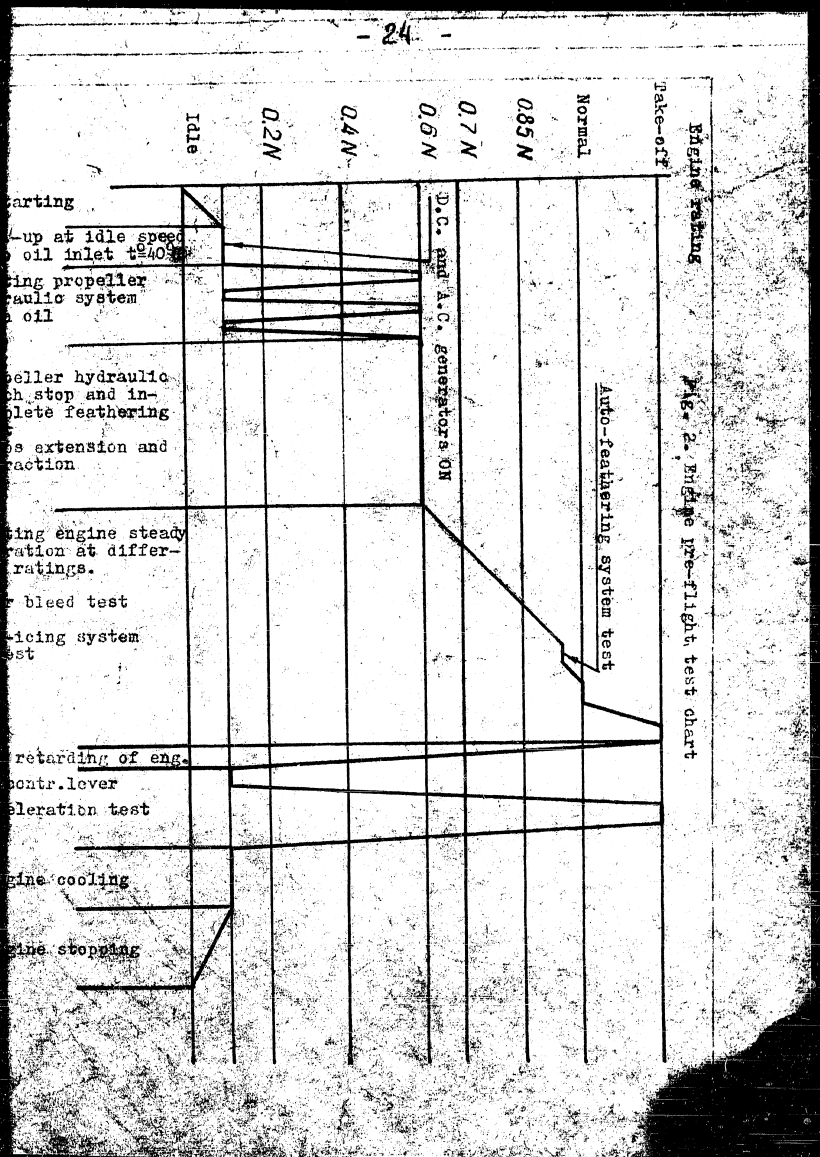

Fig. 2. Engine pre-flight test chart

Declassified in Part - Sanitized Copy Approved for Release 2011/12/14 : CIA-RDP80T00246A064200070001-1

Declassified in Part - Sanitized Copy Approved for Release 2011/12/14 : CIA-RDP80T00246A064200070001-1

Check the propeller flight-fine pitch stop control as follows:

- set the engine power control lever at $50^{\circ}\pm2^{\circ}$ by observing the УНРТ-2 fuel control lever position indicator reading;

- set the propeller pitch stop control switch in the "PROP. PITCH STOP ON" position;

- smoothly retard the engine power control lever till the engine speed decreases from 12,300 ± 90 r.p.m. (95-96%) to 12,000 r.p.m. (93%), after that set the propeller pitch stop control switch in the "PROP. PITCH STOP RELEASED" position.

The engine should attain the initial speed i.e. 12,300±90 r.p.m. (95-96%).

Test the incomplete propeller feathering as follows:

- set the engine power control lever at $50^{\circ}\pm2^{\circ}$ by the УНРТ-2 fuel control lever position indicator;

- set the propeller pitch stop control switch in the "PROP. PITCH STOP ON" position;

- press the incomplete feathering control button for 0.5 sec. and release it; the engine speed should drop by 200-300 r.p.m. ([illegible]%) and then reach the required value.

NOTES: 1. If the "incomplete feathering" control button is [illegible] dentaly pressed till the r.p.m. decrease to [illegible] the ИТЭ-2 electric tachometer indicator [illegible] pull out the КОМ-37 button (unfeather [illegible] and hold it till the required r.p.m. [illegible] (95-96%) by the ИТЭ-2 electric [illegible] cator).

2. In case the button is pressed [illegible] continues decreasing stop the [illegible] engine cut-out valve.

Declassified in Part - Sanitized Copy Approved for Release 2011/12/14 : CIA-RDP80T00246A064200070001-1

Declassified in Part - Sanitized Copy Approved for Release 2011/12/14 : CIA-RDP80T00246A064200070001-1

Test the automatic feathering system as follows:

a) run the engine at a speed exceeding 0.7 normal rating (61° by the VIPT-2 fuel control lever position indicator); set the propeller pitch stop control switch in the "PROP.PITCH STOP ON" position;

b) switch on the automatic feathering test switch: the "PROP.PITCH STOP RELEASED" warning light should come on;

c) set the engine power control lever in the idle speed position (0° by the VIPT-2 fuel control lever position indicator); the "PROP.PITCH STOP RELEASED" warning light should go out and the "FEATHERING" warning light comes on.

The feathering light illumination indicates that the feathering pump and feathering timer started operating, but the propeller blades change for the minimum pitch angle $\gamma = 0^{\circ}$, and the engine continues idling normally.

After 20 sec. the feathering timer switches off the feathering pump, the feathering warning light should go out and the "PROP.PITCH STOP RELEASED" light should come on.

d) After testing the auto-feathering system switch off the auto-feathering test selector switch, as a result of this the system returns to the initial position and the "PROP.PITCH STOP RELEASED" warning light goes out.

NOTE: It is recommended to reduce the feathering pump operating cycle by momentarily pulling out the KVL-37 button.

The engines operation at different ratings is checked by moving the engine power control levers from the initial to take-off rating. The engines steady operation is checked at 82° ± 4° and 98°-105° by the VIPT-2 fuel control lever position indicator for 10-15 sec.

The engine acceleration is tested by moving the engine power control levers from 0° to 98-102° by the VIPT-2 fuel control lever position indicator for 3-4 sec. with the propeller pitch stop control [illegible] smoothly

Declassified in Part - Sanitized Copy Approved for Release 2011/12/14 : CIA-RDP80T00246A064200070001-1

Declassified in Part - Sanitized Copy Approved for Release 2011/12/14 : CIA-RDP80T00246A064200070001-1

ch in the "PROP.PITCH STOP ON" position. To determine the accelera-
time, start a stop watch when beginning to move the engine power
rol levers and when the readings of the torque pressure indicator
the fuel pressure gauge indicating pressure before the fuel nozzles
le, stop the engine.

The engine acceleration time does not exceed 15 sec., after that
the propeller pitch stop control switch in the "PROP.PITCH STOP
EASED" position and in 3-4 sec. move the engine power control lever
m 98°-105° to 0° by the ИПТ-2 fuel control lever position indi-
or. The idle speed is attained in 7-11 sec.

To stop the engine, proceed as follows:

- run the engine at idle speed for 2-3 min. for cooling the engine;
- stop the engine by the cut-out valve;
- measure the time required for the engine to run from 1000 r.p.m.
%) to full stop (which should not be less than 60 sec.).

After the engines are stopped, set all the systems in the initial
ition:

- open the engine cut-out valves;
- de-energize the fire-extinguishing system;
- close the oil cooler duct shutters;
- set the oil cooler ejector valve control lever in the "CLOSED"
sition;
- switch off the circuit breakers and de-energize the aircraft
ectrical system;
- lock the aircraft control surfaces and the engine power control
vers.

Declassified in Part - Sanitized Copy Approved for Release 2011/12/14 : CIA-RDP80T00246A064200070001-1

Declassified in Part - Sanitized Copy Approved for Release 2011/12/14 : CIA-RDP80T00246A064200070001-1

NOTES: 1. Should the engine cut-out valve fail stop the engine by the emergency feathering valve.

2. The radio operator is strictly forbidden to de-energize the aircraft electrical system before the engines are stopped completely.

S E C T I O N III

FLYING THE AIRCRAFT BY DAY UNDER NORMAL WEATHER CONDITIONS

I. PREPARING THE AIRCRAFT FOR TAXIING OUT

Before taxiing out, the captain must:

1. Occupy the seat and adjust it for height, put on the parachute and fasten the safety belts.

2. Switch on the CHV-7 intercommunication equipment and ask the crew members whether they are ready for the engines to be started.

3. Start the engines according to this instruction (section II, paragraph 4). After starting is completed give a command to disconnect the external power supply source.

4. Switch on the main L.G. wheels anti-skid control the PB-2 radio altimeter, АГБ-2 artificial horizon, ЗУП-53 turn-and-bank indicator and ГМК-1 gyro flux-gate compass.

Set the altimeter pointer at "0" and [illegible] after 3-5 min. turn the АГБ-2 artificial horizon caging knob to the right removing the red indicating flag.

5. Check that the trim tabs are in the neutral position (the warning lights are illuminated).

6. Check that the propeller pitch stop is released (the propeller pitch stop control switch is in the "PROP. PITCH STOP RELEASED" position.)

Declassified in Part - Sanitized Copy Approved for Release 2011/12/14 : CIA-RDP80T00246A064200070001-1

Declassified in Part - Sanitized Copy Approved for Release 2011/12/14 : CIA-RDP80T00246A064200070001-1

7. Check the L.G., flaps and access doors control levers for pro- position and locking.
8. Move the elevators, rudder and ailerons.
9. Check the flaps operation; to do this, extend and retract them ce (from the port and starboard consoles).
10. Make sure that the valves of the dynamic and static lines are the " Port Side" position.

The co-pilot must:

1. By the captain's command open and close the emergency escape door the "Escape Door Open-Closed" switch.
   Check that the cabin pressurization switches and engine air bleed itches are in the "Off" position. Set the escape door sealing lever the "Sealed" position.
2. Check the position and locking of the L.G. control levers (main d auxiliary systems), flaps and emergency escape door control levers.
3. See that the trim tabs are in the neutral position (trim tabs utral position warning lights should glow).
4. Switch on the AGK-2 artificial horizon, DGA-53 turn-and-bank dicator, neutral gas heater, guide vanes assembly ice detectors and quid oxygen contents gauge, set the altimeter pointer at "0 ".
5. Check that the Pitot tubes heaters are serviceable. With the TA-156M Pitot tube heater switches on the right instrument panel t in the "Test" position the propeller warning light should come . Set the switches in the neutral position.

   [illegible] if necessary, the pilot and co-pilot switch on the window panels heaters.

2. TAXYING

1. Before taxying the captain shall:

Order the co-pilot to hold the control wheel.

Declassified in Part - Sanitized Copy Approved for Release 2011/12/14 : CIA-RDP80T00246A064200070001-1

Declassified in Part - Sanitized Copy Approved for Release 2011/12/14 : CIA-RDP80T00246A064200070001-1

- Receive reports of the crew members about their readiness for light.

- Over radio ask the airport traffic controller for permission to axy.

- After receiving permission to taxi, signal the ground crewman o remove the wheel chocks.

- Switch on the nose L.G. steering control; to do this, pull the teering hand wheel fully; check that the L.G. steering control is on y the amber light illumination.

CAUTION: Never turn the nose L.G. steering hand wheel before the aircraft moves-off from rest.

-Release the parking brake by pressing both the brake control edals simultaneously.

2. To move the aircraft off from rest, the captain should increase he inboard engines speed by setting the power control levers at 0-35° indicated by the УПРТ-2 fuel control levers position indicator. o prevent rapid acceleration after the aircraft has moved-off from est, decrease the inboard engines speed to 20° or 0° by the УПРТ-2 uel control lever position indicator.

Maintain the required direction and make turns, when taxying, by operating the nose L.G. steering hand wheel.

3. Taxy on a concrete runway, with the engines power control evers at 0° by the УПРТ-2 fuel control lever position indicator, aintain the required speed applying the brakes.

When taxying, the co-pilot observes the surrounding area and, if necessary, reports the captain about obstacles.

4. When taxying, the captain must check:

- the operation of the brakes and the [illegible] control by smoothly [illegible] the pedals (with the braking system reliably operating both the [illegible] lights should blink);

Declassified in Part - Sanitized Copy Approved for Release 2011/12/14 : CIA-RDP80T00246A064200070001-1

Declassified in Part - Sanitized Copy Approved for Release 2011/12/14 : CIA-RDP80T00246A064200070001-1

- the operation of the emergency wheel braking system by smoothly lling the emergency brake levers backward.

CAUTION: 1. Never brake sharply with the nose L.G. wheels turned.

2. Prevent sharp braking, when using the emergency braking system, as it may result in considerably wearing or even tearing off the tyres.

5. Taxying speed in a congested area and on a rough surface should ot exceed 10 km./hr.

On straight runway and runway free from obstacles, taxying speed ay be increased to 30 km./hr.

6. Taxying on soft ground is accomplished, as a rule, with the utboard engines power control levers at 0° by the VIPT-2 fuel control lever position indicator, the outboard engines power control levers osition depends on the ground surface condition and taxying speed.

7. Stop the aircraft by smooth braking, gradually decreasing he taxying speed to prevent fore-and-aft shaking of the aircraft.

III. PREPARATION FOR TAKE-OFF

In the run-up area before taxying on the runway:

1. The captain must ask the airport traffic controller for permission to taxy on the runway.

2. The co-pilot must extend the flaps to the take-off setting at 25°) by the captain's command.

Having taxied on the runway:

1. Align the aircraft with the centre line of the runway in take-off direction.

2. Switch off the nose L.G. steering control, to do this, push he steering hand wheel (the amber warning light should go out) and axy 5-10 m. straight.

3. Stop the aircraft and apply the brakes.

4. Set the propeller pitch stop control switch to the "TAKE-OFF

Declassified in Part - Sanitized Copy Approved for Release 2011/12/14 : CIA-RDP80T00246A064200070001-1

Declassified in Part - Sanitized Copy Approved for Release 2011/12/14 : CIA-RDP80T00246A064200070001-1

OP ON" position and ensure that the warning lights are not illuminat-

CAUTION: 1. After the propeller pitch stop is on, do not retard the engine power control levers below 20-22° by the MUT-2 fuel control lever position indicator and do not set the switch in the "PROP.PITCH STOP RELEASED" position.

2. Take-off and flight with the switches in the "PROP. PITCH STOP RELEASED" position and take-off if the propeller pitch stop is not on are strictly prohibited.

5. Check that:

- the flaps are extended to the take-off setting at 25°;

- the trim tabs are in the neutral position (the warning lights e glowing);

- the readings of the ПМК-1 gyro flux-gate compass and ПМК-52 rectional gyro correspond to the take-off heading.

6. Address the airport traffic controller:

"The propeller pitch stops ON, flaps - at 25°; autofeathering ON, y/take-off".

CAUTION: 1. Never switch on the engine air bleed system for pressurization and heating of the cabins before taking off.

2. If the air cooler ejector system is employed set the oil cooler ejector valve switch in the "CLOSED" position.

Declassified in Part - Sanitized Copy Approved for Release 2011/12/14 : CIA-RDP80T00246A064200070001-1

Declassified in Part - Sanitized Copy Approved for Release 2011/12/14 : CIA-RDP80T00246A064200070001-1

IV. TAKE - OFF

Having received permission to take-off, the captain applies the brakes and smoothly moving the outboard engines power control levers obtains normal rating (84° by the UPT-2 fuel control lever position indicator). Then in the same sequence moves the inboard engines power control levers to obtain the rating corresponding to 84° (by the UPT-2 fuel control levers position indicator) or the rating at which the aircraft moves off from rest. Having received the flight engineer's report: "Outboard and inboard propellers are loaded", and having checked the engine instruments for correct readings, the captain releases the brakes and starts take-off run. During take-off run the captain moves all the engines power control levers to take-off rating (100° by the UPT-2 fuel control lever position indicator).

NOTE: When all the four engines operate at take-off rating the brakes cannot hold the aircraft.

If the runway is wet or covered with snow (ice), the brakes cannot hold the aircraft with the engines operating at normal rating 84° by the UPT-2 indicator).

In this case perform take-off as well as from a normal runway, i.e. move the outboard engines power control levers to 60°-70° (by the UPT-2 fuel control levers position indicator), then move the inboard engines control levers to 30°-40° position (by the UPT-2 indicator).

Having received the flight engineer's report "Outboard and inboard propellers are loaded" and "Instruments reading are normal", start take-off run; smoothly obtaining take-off rating (100° by the UPT-2 indicator), do not move the engine power control levers rapidly to prevent the aircraft turn due to asynchronous thrust.

Take-off under still air conditions or at a head wind is not difficult. During take-off run the aircraft tends to turn to the right

Declassified in Part - Sanitized Copy Approved for Release 2011/12/14 : CIA-RDP80T00246A064200070001-1

Declassified in Part - Sanitized Copy Approved for Release 2011/12/14 : CIA-RDP80T00246A064200070001-1

e to the propellers torque, this is easily counteracted by the nose
. wheels steering control interlocked with the rudder.

When a speed of 140-150 km./hr. is attained, clear the nose L.G.
els of the ground by smoothly pulling the control column. To make
nose wheels come clear of the runway with the elevator trim tab in
neutral position, it is necessary to apply a considerable force to
ll the control column. During take-off run, with normally
fted nose wheels, the horizon is at 1/4 from the lower edge of the
ndscreen. Depending on the aircraft take-off weight the aircraft un-
icks the runway at a speed of 185 to 220 km./hr. When coming clear of
e ground and after it the aircraft is stable and does not tend to
nk.

NOTE: Never try to maintain the directional control of the aircraft heading at take-off by operating the engine power control levers.

After unsticking the ground, gradually climb and increase speed so
at at an altitude of 100 m. the air speed is 310-320 km./hr.

At an altitude of 10-15 m., by the captain's command, the co-pilot
tracts the L.G., and at an altitude not less than 100 m. and 310-320km
r.I.A.S. retracts the flaps. The flaps must be retracted in 2-3 steps
nchronously. When retracting the flaps, the aircraft tends to loose
titude which is easily counteracted by slightly pulling the control
lumn.

WARNING: 1. After retracting (extending) the L.G. and flaps set the control levers in the neutral position and lock them.

2. Holding the L.G. control lever in the extreme positions more than 60 secs. may result in failure of the L.G. control solenoid valve.

If during the take-off run the aircraft deviates more than 15° from
e take-off heading, and the initial take-off heading cannot be resumed

Declassified in Part - Sanitized Copy Approved for Release 2011/12/14 : CIA-RDP80T00246A064200070001-1

Declassified in Part - Sanitized Copy Approved for Release 2011/12/14 : CIA-RDP80T00246A064200070001-1

captain must abort the take-off as follows:

- retard all the engines power control levers to 0° (by the УПРТ-2 l control levers position indicator);
- release the inboard and then outboard engines propellers pitch ops;
- apply the main brakes (or emergency brakes if necessary);
- to prevent the aircraft rolling from the runway and colision with structions, steer the aircraft by the nose L.G. steering hand wheel; e steering hand wheel rotation should be smooth.

V. CLIMB, LEVEL FLIGHT AND DESCENT

After retracting the flaps retard the engine power control levers normal rating (84° by the УПРТ-2 indicator) or some other rating quired, continue climbing to cicling flight altitude at 350 km./hr. A.S.

Perform the first turn at an altitude not below 200 m., and 340-50 km./hr. I.A.S.

Circling flight is made, as a rule, in a large rectangular pattern.

Climb to an established altitude is performed at the engine nor- [illegible] climb to an altitude of 6,000 [illegible] at 350 km./hr. I.A.S.

[illegible] further climb the indicated air speed decreases 10 km. for [illegible] m. of altitude gain.

When climbing for an altitude flight, after take-off, run the [illegible] normal rating, seal the cabin, switch on the cabin [illegible] and [illegible] altitude of [illegible] m. put on [illegible] [illegible] to the required altitude, without changing [illegible] change the aircraft attitude for level flight [illegible] [illegible] the cruising speed in the shortest possible time [illegible] required cruising speed move the engines power [illegible]

Declassified in Part - Sanitized Copy Approved for Release 2011/12/14 : CIA-RDP80T00246A064200070001-1

Declassified in Part - Sanitized Copy Approved for Release 2011/12/14 : CIA-RDP80T00246A064200070001-1

ers to the corresponding rating position. En route periodically check
flight condition. If the speed and altitude deviate from the preset
ues restore them by changing the engine rating.

The speed change in level flight, with the engine power control
ers in constant position, is caused by decrease in the aircraft
ght due to the fuel consumption, this results in the speed increase.
speed change also depends on outside air temperature with in-
ase in outside air temperature the speed decreases, with decrease -
speed increases.

In level flight as well as at climb, with the trim tabs in the
tral position, due to the propellers torque, the aircraft tends to
m and bank to the right, this is counteracted by trimming the air-
ft.

The aircraft operates normally within level flight I.A.S. limits
280 to 520 km./hr.

Table I.

TAKE-OF-CLIMB VERSUS TAKE-OFF WEIGHT

Take-off weight G=51,000 kg.			Take-off weight G=54,000 kg.		
itude nd.m.)	I.A.S. (km./hr.)	Time to climb (min.)	Altitude (Mand.m.)	I.A.S. (km./hr.)	Time to climb (min.)
0	350	0	0	350	0
000	350	1.1	2000	350	1.6
000	350	4.6	4000	350	7.5
000	350	10.1	6000	350	12.1
000	330	15.6	8000	330	18.2
000	310	22.8	10000	310	30.5

Declassified in Part - Sanitized Copy Approved for Release 2011/12/14 : CIA-RDP80T00246A064200070001-1

Declassified in Part - Sanitized Copy Approved for Release 2011/12/14 : CIA-RDP80T00246A064200070001-1

RANGE AND DURATION OF FLIGHT

Range and duration of flight with the given fuel load depends on flying altitude and speed. With increase in flying altitude to service ceiling the range and duration of flight increase. Maximum duration of flight at all altitudes is obtained at 300 km./hr.I.A.S.

The speeds corresponding to the max. flying range versus altitude are given in Table 2.

Table No.3 illustrates fuel consumption, distance and time for take-off, climb and gliding.

Declassified in Part - Sanitized Copy Approved for Release 2011/12/14 : CIA-RDP80T00246A064200070001-1

FUEL CONSUMPTION PER KILOMETER AND HOUR VERSUS BEST FLYING SPEEDS

Altitude, (m.)	Mach number	Speed (km./hr.)		Average take-off weight					
				45,000		47,000		49,000	
		Indicated	True	Fuel consumption					
				per km. (kg./km.)	per hour (kg./hr.)	per km. (kg./km.)	per hour (kg./hr.)	per km. (kg./km.)	per hour (kg./hr.)
1000	0.385	460	465	5.40	2510	5.40	2510	5.43	2520
2000	0.400	450	480	4.90	2350	4.90	2350	4.92	2360
3000	0.405	430	480	4.45	2140	4.45	2140	4.48	2150
4000	0.420	420	490	4.05	1990	4.08	2000	4.12	2020
5000	0.440	410	505	3.73	1880	3.76	1900	3.77	1900
6000	0.460	390	510	3.38	1720	3.43	1750	3.45	1760
7000	0.470	380	525	3.07	1610	3.10	1630	3.18	1670
8000	0.480	370	540	2.88	1560	2.92	1580	2.98	1610
9000	0.500	350	540	2.70	1460	2.77	1500	2.86	1550
10000	0.515	340	555	2.61	1450	2.68	1490	2.79	1550

Declassified in Part - Sanitized Copy Approved for Release 2011/12/14 : CIA-RDP80T00246A042000700001-1

FUEL CONSUMPTION, DISTANCE AND TIME FOR TAKE-OFF, CLIMB AND FINAL APPROACH

During climb the engines operate at normal rating, during gliding - at flight idle rating; 450 km./hr. I.A.S.

Altitude, (m.)	I.A.S. (km./hr.)	Climb									Descent to an altitude of 500 m.		
		Take-off weight, (kg.)											
		46,000			51,000			54,000					
		Fuel consumption (kg.)	Distance (km.)	Time (min.)	Fuel consumption (kg.)	Distance (km.)	Time (min.)	Fuel consumption (kg.)	Distance (km.)	Time (min.)	Fuel consumption (kg.)	Distance (km.)	Time (min.)
1000	330	180	10	3	220	10	3	260	10	4	30	10	1
2000	350	270	20	4	320	20	5	360	20	6	100	20	3
3000	350	350	30	6	410	30	7	470	30	8	170	40	5
4000	350	430	40	7	510	40	8	570	40	10	230	60	7
5000	350	510	50	9	600	50	10	680	60	12	290	80	10
6000	350	590	60	11	700	70	12	790	80	14	350	100	12
7000	340	680	70	13	800	90	15	900	100	17	400	120	14
8000	330	760	90	15	910	110	17	1040	130	20	450	140	16
9000	320	850	110	17	1040	140	21	1210	170	25	480	170	18
10000	310	960	140	20	1200	180	26	1460	230	32	510	190	20

NOTES:
1. Fuel reserve (not consumed) - 100 kg.
2. Fuel consumption with engines running on the ground (for 16 min.) - 430 kg.
3. Fuel consumption when flying circle (for 8 min.) - 280 kg.

Declassified in Part - Sanitized Copy Approved for Release 2011/12/14 : CIA-RDP80T00246A042000700001-1

Declassified in Part - Sanitized Copy Approved for Release 2011/12/14 : CIA-RDP80T00246A064200070001-1

DESCENT

Descend the aircraft to the circle altitude at the engine rating responding to 20° by the УПРТ-2 fuel control lever position indic[illegible], indicated air speed not exceeding 500 km./hr. and vertical speed descent of 7-12 m./sec.

In case of emergency descent:

- retard all the engines (or inboard engines) power control levers 0° (by the УПРТ-2 indicator):

- descend the aircraft. The vertical speed should be within 25- m./sec.

Remove the forces which act on the control column during descent the elevator trim tab.

During descent Mach number and IAS should not exceed the permissi values.

Fly the circle at an altitude of 300-500 m. Indicated air speed uld be: 350-400 km./hr. (with L.G. up) and 320-350 km./hr. (with L.G. n).

Extend the L.G. on the straight line between the 2-nd and 3-rd ns after passing the distant radio station leg at IAS not exceeding km./hr. The L.G. extension does not affect the aircraft [illegible]

After extending the L.G., to maintain the required air [illegible] rease the engine rating 10-15° by the УПРТ-2 fuel control [illegible] ition indicator. Make the fourth turn with 15-20° bank at 320- 0 km./hr. I.A.S. The altitude at which the fourth [illegible] not be less than 300 [illegible]

After the fourth turn, descend the aircraft gradually [illegible] s the distant radio station at an altitude [illegible] end the flaps in two steps: at an [illegible] tant radio station at a speed of [illegible] after passing the distant radio [illegible] rding to [illegible] the take-off weight.

Declassified in Part - Sanitized Copy Approved for Release 2011/12/14 : CIA-RDP80T00246A064200070001-1

Declassified in Part - Sanitized Copy Approved for Release 2011/12/14 : CIA-RDP80T00246A064200070001-1

The flaps are extended through an angle of 35° smoothly not affect- the aircraft trimming. Hold the aircraft on the glide path by slight- ushing the control column forward.

After extending the flaps at an angle of 35° obtain the gliding ed of 250-280 km./hr. (depending on the gross weight, wind direction speed), set the outboard engines power control levers taking into ount the landing airfield air temperature not less than 16° by the -2 indicator.

On final approach operate the inboard engines power control levers keep the aircraft aimed at the runway landing point.

WARNING: On approach descent, never decrease the speed to less than 250 km./hr. and do not retard the engine power control levers through the trip catches.

VI. LANDING

Having ensured that the aircraft is aimed correctly, enter the ndout altitude of 8-10 m. and descend to the float altitude of 5-0.5 m.

When floating, smoothly and simultaneously retard the inboard engi- power control levers to 0° by the VMPT-2 fuel control levers posi- on indicators. Retarding of the inboard engines power control levers 0° (by the VMPT-2 indicator), with the flaps 35° extended, results quick decrease in speed and altitude, in this case carefully and rgetically pull the control column.

To touch the runway with the main L.G. wheels, apply to the control umn considerable pulling force whose value depends on the aircraft position.

After the touchdown, having ensured that the aircraft is steadily ning along the runway, retard the outboard engines power control ers to 0° (by the VMPT-2 indicators). Next, after the nose L.G.

Declassified in Part - Sanitized Copy Approved for Release 2011/12/14 : CIA-RDP80T00246A064200070001-1

Declassified in Part - Sanitized Copy Approved for Release 2011/12/14 : CIA-RDP80T00246A064200070001-1

eels lowering and the aircraft steers run along the runway, release irst the inboard and then outboard engine propeller pitch stops. uring landing run control the aircraft by the rudder inter locked with he nose wheel steering system, and if necessary - by the wheel brakes. ply the brakes, only in case of necessity, as the landing run is onsiderably decreased due to braking by the propellers.

Bear in mind that after the nose wheel is lowered the anti-kid control permits applying the brakes only by pressing the brake control pedals, holding them in this position till the aircraft is com- l ely stopped.

t the end of the landing run at a speed of about 15-20 km./hr. ull the nose L.G. steering hand wheel fully, leave the runway and etract the flaps.

WARNING: Never land the aircraft with L.G. wheels locked.

Table 4 gives landing speeds and values of the aircraft landing un versus the landing weight, when landing on a concrete runway, with he flaps 35° extended.

Table 4.

Landing weight kg.	Landing run, m.	Landing speed, km./hr.
43,000	700-830	199
46,000	760-850	205
50,000	860-1,000	219
51,000	890-1,030	223

NOTES: 1. The minimum landing run is obtained when effectively applying the L.G. wheel brakes during landing run, releasing the propellers pitch stops in time and using the propellers braking effect.

2. The maximum landing run is obtained when the L.G. wheels braking is accomplished at the end of landing run.

Declassified in Part - Sanitized Copy Approved for Release 2011/12/14 : CIA-RDP80T00246A064200070001-1

Declassified in Part - Sanitized Copy Approved for Release 2011/12/14 : CIA-RDP80T00246A064200070001-1

VII. MISSED-APPROACH PROCEDURE

Missed-approach procedure can be made, as a rule, at an altitude not less than 50 m.

In some cases, when the aircraft cannot be safely landed, the missed-approach procedure may be taken at any altitude, provided all the four engines operating at the rating corresponding to 18° by the VIPT-2 fuel control levers position indicator (the engine power control levers are secured by the trip catches).

When the decision to take the missed-approach procedure is made, smoothly move all the engines power control levers to set the take-off rating - 100° by the VIPT-2 fuel control levers position indicator, after that give the co-pilot the command: "RETR OF L.G." Hold the aircraft above the ground to attain the required speed gradually ascending. Remove the elevator loads by the trim tab. Having attained a speed of 280-300 km./hr. (max.) and an altitude not less than 100 m., retract the flaps in small increments and decrease the engine rating to normal (84° by the VIPT-2 indicator) for climbing to the required altitude, after that repeat the landing approach procedure.

VIII. CROSSWIND TAKE-OFF AND LANDING

If a crosswind exists, take-off and landing may be accomplished when the wind component is not more than 90° relative to the runway and the wind speed does not exceed 10 m./sec.

1. CROSSWIND TAKE-OFF

A crosswind hampers the take-off prosedure considerably, the right and left crosswinds affect the aircraft take-off differently.

The aircraft L.G. small track effects its directional stability during the take-off run at a crosswind and the fuselage large side

Declassified in Part - Sanitized Copy Approved for Release 2011/12/14 : CIA-RDP80T00246A064200070001-1

Declassified in Part - Sanitized Copy Approved for Release 2011/12/14 : CIA-RDP80T00246A064200070001-1

[illegible] with the high wing placement [illegible] in [illegible] moment affecting [illegible] aircraft lateral stability.

[illegible] to the aircraft bank [illegible] turning moment down wind whose value [illegible] on the wind [illegible].

[illegible] take-off at the right crosswind the turning moment [illegible] t) caused by the wind is partially counter[illegible] by the [illegible] ent [illegible] to the right) caused by the propeller torque.

[illegible] the beginning of take-off run [illegible] the [illegible] ent by steering the nose [illegible] [illegible] the ailerons in the wind [illegible] ed, [illegible] control surfaces [illegible] erons deflection and maintain the aircraft [illegible] control [illegible] rudder.

[illegible] the left crosswind [illegible] ent [illegible] the right) caused by the [illegible] ning moment (to the right) caused by the [illegible] the right L.G. bogie [illegible] de - [illegible], the left bogie may [illegible] the [illegible] t in [illegible] the wheels braking effect. [illegible] crosswind (particularly left) counteract the [illegible] the ailerons in the wind direction.

During take-off at a crosswind raise the nose [illegible] [illegible]ding the speed during a normal take-off by [illegible] km/hr.

2. CROSSWIND LANDING

During landing approach at a crosswind counter-balance the drift effect before passing the nearest radio station by changing the [illegible]craft heading. After the nearest radio station passage align the [illegible]craft with the runway axis and counter-balance the drifting effect [illegible] slipping.

Declassified in Part - Sanitized Copy Approved for Release 2011/12/14 : CIA-RDP80T00246A064200070001-1

Declassified in Part - Sanitized Copy Approved for Release 2011/12/14 : CIA-RDP80T00246A064200070001-1

Before landing eliminate the bank.

After touchdown immediately deflect the ailerons in the wind di-
tion to eliminate the banking moment. At the wind side component
about 10 m./sec. turn the control wheel through approximately 180°.
er that maintain the landing run direction by steering the nose L.
wheels by the rudder pedals and in some cases by applying the
kes.

IX. TAKE-OFF AND LANDING WITH C.G. IN MAX. FORWARD AND AFT LIMIT POSITIONS

During take-off with the operating C.G. position at max. fore
it the aircraft does not nose up easily. In this case the take-off
and take-off speed somewhat increase. To facilitate take-off with
. in max. forward limit position, before taking-off, set the ele-
or trim tab 1-1.5 divisions backward.

Landing with C.G. in max. forward limit position requires parti-
ar attention. To facilitate landing, set the elevator trim tab
-2 divisions backward.

To land the aircraft on the main L.G., retard the inboard engine
er control levers to 0° (by the УИПТ-2 indicator) at the end of
ating after the aircraft has occupied the landing position.

During take-off with C.G. in max. aft limit position the aircraft
es up more easily, therefore before taking-off set the elevator
m tab 1-1.5 division forward. With C.G. in max. aft limit position
roundrun before landing, the aircraft easily reaches large angles
ttack with further reduction in speed.

After touchdown the aircraft lands to lower the tail and
lower the nose L.G. wheel easily.

Therefore during extending with C.G. in max. aft limit position
the elevator trim tab 1-1.5 divisions forward.

Declassified in Part - Sanitized Copy Approved for Release 2011/12/14 : CIA-RDP80T00246A064200070001-1

Declassified in Part - Sanitized Copy Approved for Release 2011/12/14 : CIA-RDP80T00246A064200070001-1

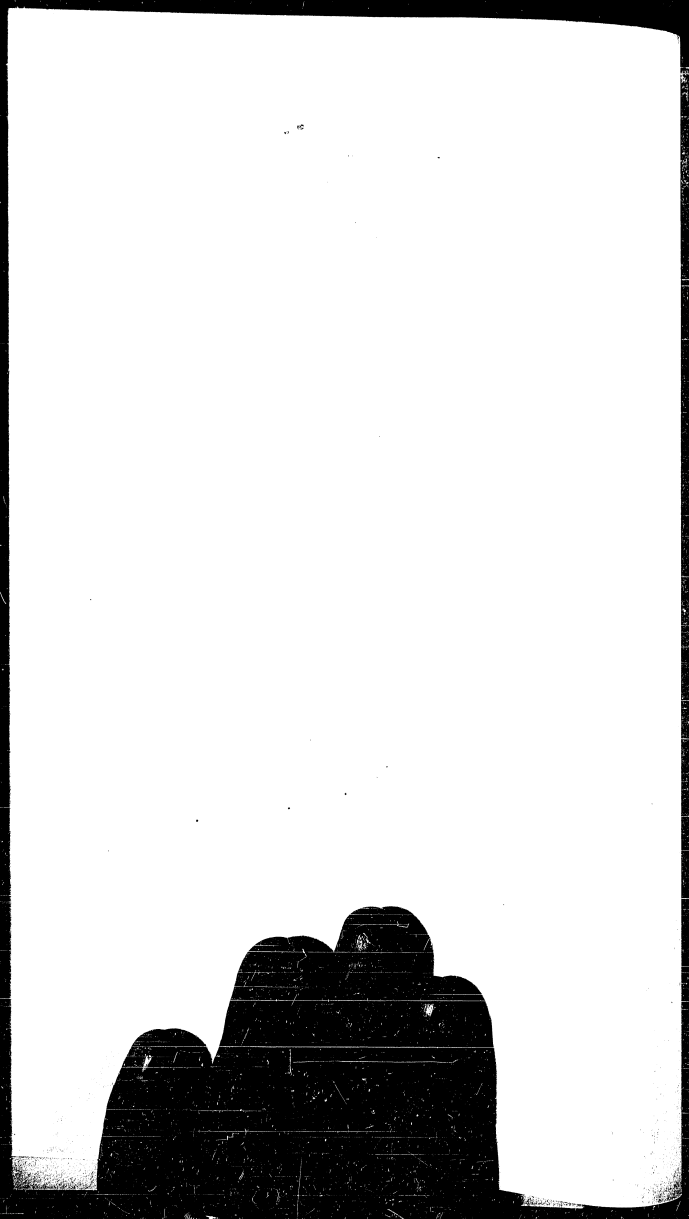

X. LANDING WITH FLAPS RETRACTED

During landing approach, with the flaps retracted, maintain final approach speed of 300-310 km./hr. After passing the ...nt radio station set the final approach speed of 280-290km/hr. After retarding the inboard engines power control levers to ... by the VUPT-2 indicator), the speed decreases more slowly ... with the flaps extended.

The aircraft easily reaches the landing angles of attack, loads on the control column are small. After the main L.G. els touch the runway, the aircraft tends to lower the tail and s not nose down easily. Except cases when the fuselage bottom uches the runway, lower the nose L.G. by smoothly pushing the ntrol column, next retard the outboard engines power control vers to 0° (by the VUPT-2 indicator). After that release rst the inboard and then outboard propellers pitch stops.

WARNING: Minimum final approach speed, when landing with the flaps retracted, is 280 km./hr.

XI. TAKE-OFF AND LANDING ON SOFT SURFACE RUNWAYS

To take-off and land on a soft surface runway it should be hard and dry, capable of withstanding a pressure of 8-10 kg./cm.^{2}, 1500m. long and have clear approaches.

When performing take-off, bring the nose L.G. wheel clear of the ground at a speed 10-15 km./hr. less than that when taking-off from concrete runways. Land on a soft surface runway only with the main L.G. wheels first. Lower the nose L.G. at a speed less than that, when landing on concrete runways.

After the nose L.G. touchdown immediately release the propellers pitch stops and at the end of the landing run smoothly apply the brakes until complete stop of the aircraft.

Declassified in Part - Sanitized Copy Approved for Release 2011/12/14 : CIA-RDP80T00246A064200070001-1

Declassified in Part - Sanitized Copy Approved for Release 2011/12/14 : CIA-RDP80T00246A064200070001-1

X. LANDING WITH FLAPS RETRACTED

During landing approach, with the flaps retracted, maintain the final approach speed of 300-310 km./hr. After passing the distant radio station set the final approach speed of 280-290 km/hr.

After retarding the inboard engines power control levers to 0° (by the VUPT-2 indicator), the speed decreases more slowly than with the flaps extended.

The aircraft easily reaches the landing angles of attack, the forces on the control column are small. After the main L.G. wheels touch the runway, the aircraft tends to lower the tail and does not nose down easily. Except cases when the fuselage bottom touches the runway, lower the nose L.G. by smoothly pushing the control column, next retard the outboard engines power control levers to 0° (by the VUPT-2 indicator). [illegible] release [illegible] the inboard and then outboard propellers pitch stops.

WARNING: Minimum final approach speed, when landing with the flaps retracted, is 260 km./hr.

XI. TAKE-OFF AND LANDING ON SOFT SURFACE RUNWAYS

To take-off and land on soft surface runways, the surface must be hard and dry, capable of withstanding a pressure of [illegible] kg./cm.², long and have clear approaches.

When performing take-off, bring the nose L.G. wheel clear of the ground at a speed 10-15 km./hr. less than that when taking-off from concrete runways. Land on a soft surface runway only with the main L.G. wheels first. Lower the nose L.G. at a speed less than that, when landing on concrete runways.

After the nose L.G. touchdown immediately release the propellers pitch stops and at the end of the landing run smoothly apply the brakes until complete stop of the aircraft.

Declassified in Part - Sanitized Copy Approved for Release 2011/12/14 : CIA-RDP80T00246A064200070001-1

Declassified in Part - Sanitized Copy Approved for Release 2011/12/14 : CIA-RDP80T00246A064200070001-1

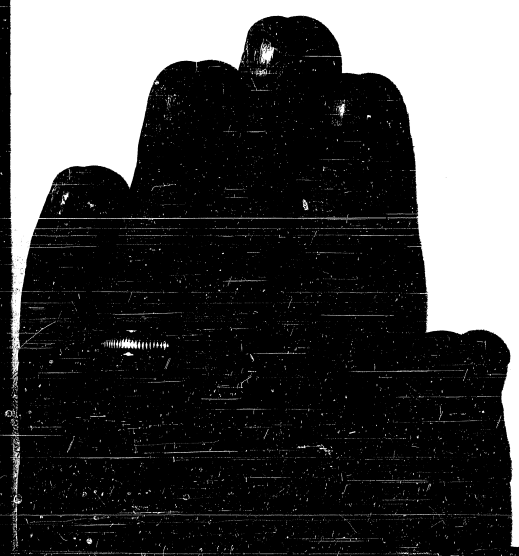

S E C T I O N IV

FLYING IN ADVERSE WEATHER CONDITIONS

For flights in adverse weather conditions, the aircraft is equipped with a required number of flight and navigational instruments, (on the pilot's and co-pilot's instrument panels), which permit flying in clouds, performing approach and landing by using the ILS.

When inspecting the aircraft intended for flight in adverse weather conditions the crew must give particular attention to checking the operation of:

- АГБ-2 artificial horizons;
- РВ-2 radio altimeter, [illegible] and ГМК-52 directional gyro;
- АРК-5 automatic direction finders;
- ГРП-2 glide path receiver, КРП-Ф localizer receiver and РП-56Д marker beacon receiver.

Check the readings of the КУС-1200 air speed indicators and АР-30-3 rate-of-climb indicators.

NOTE: The gyro instruments must be switched on not later than 6 min. before take-off.

Carry out the de-icing systems pre-flight preparation in accordance with the Operation Instructions, Section XIV.

Before the engines are started, the radio operator switches on all the circuit breakers of the de-icing system (right panel). The co-pilot checks the operation of the tail unit de-icer and Pitot tube heater, the wing and engine guide vanes ice-detecting system.

After starting the engines, the co-pilot and flight engineer check the operation of the propellers and spinners de-icers, and the operation of the wing and air de-icing system.

Declassified in Part - Sanitized Copy Approved for Release 2011/12/14 : CIA-RDP80T00246A064200070001-1

Declassified in Part - Sanitized Copy Approved for Release 2011/12/14 : CIA-RDP80T00246A064200070001-1

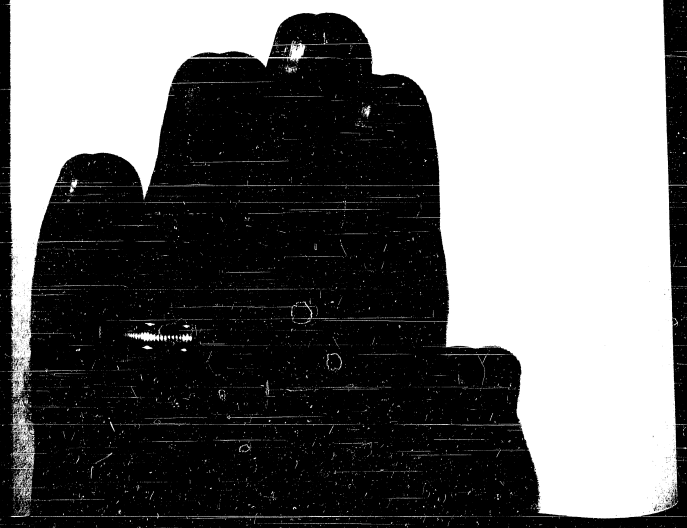

The pilot, co-pilot and navigator check the window panels heating stem operation, in case of the window panels icing they leave the INDOW PANEL HEAT." switch on.

After take-off, before the aircraft enters clouds, the co-pilot itches on the "ENGINE GUIDE VANES DE-ICER", "PROPELLER AND SPINNER -ICER" and "PITOT TUBE HEATER" switches.

Break through the clouds in strict accordance with the flying structions for the given airport.

If the wing ice-detecting system is actuated the co-pilot switches the engine air bleed control switches and the wing and tail unit -icing system switches.

WARNING: Never switch on the wing de-icers at take-off.

Break through the clouds up at the engine normal rating at 0 km./hr. IAS up to an altitude of 6,000 m. Next, decrease the climb eed 10 km./hr. after every 1000 m. of ascent.

Do not intentionally enter the clouds where icing may occur. eaking through the clouds down, approach and calculation for landing e performed, as a rule, by using the ILS in the great rectangular ttern.

During approach and calculation for landing the crew members ties are:

1. The captain must fly the aircraft and direct the crew members.

2. The co-pilot helps the captain to control the aircraft, checks at required altitudes and speeds are maintained especially during scent after the 4-th turn.

3. The navigator checks that the required headings are maintained, d the turns are performed correctly, listen to the signals of the ing station to which the ARK-5 automatic direction finder is tuned; ports the captain about deviations in altitude, speed and heading.

Declassified in Part - Sanitized Copy Approved for Release 2011/12/14 : CIA-RDP80T00246A064200070001-1

Declassified in Part - Sanitized Copy Approved for Release 2011/12/14 : CIA-RDP80T00246A064200070001-1

hecks when the earth becomes visible and reports about leaving the louds.

Make the first turn, when circle flying, with approach and calculation for landing in the great rectangular pattern, at an altitude of 50-200 m. climbing at 340-350 km./hr. IAS.

Circle flying altitude is 300-500 m. and IAS - 350 km./hr.

Perform the 2-nd turn, when flying the left-hand circle, with the PK-5 ADF indicating the radio station relative bearing of 240°, and hen flying the right-hand circle - the radio station relative bearing f 120°.

In the straight flight between the second and third turns, consider the wind and introduce a correction for the drift angle in the magetic heading.

On the captain's command the co-pilot extends the L.G. after passing the distant radio station leg. Fly with the L.G. down at 40-350 km./hr. IAS.

Perform the third turn at the radio station relative bearing of 40° when flying the left-hand circle , and at the radio station relative bearing of 120° when flying the right-hand circle.

Perform the fourth turn at the radio station relative bearing of 20° ± the drift angle when flying the right hand circle. When performing the turn, check the readings of the directional gyro and the DP indicator. After recovery from the fourth turn, with the known drift angle on the landing heading, make corrections to the heading by observing the instruments readings.

During shallow descent, after the fourth turn set IAS of 340-320 km./hr., extend the flaps 20-25°. Pass the distant radio station at an altitude not less than 200 m. After passing the distant radio station and leaving the clouds, extend the flaps 35°.

Declassified in Part - Sanitized Copy Approved for Release 2011/12/14 : CIA-RDP80T00246A064200070001-1

Declassified in Part - Sanitized Copy Approved for Release 2011/12/14 : CIA-RDP80T00246A064200070001-1

Pass the nearest radio station at an altitude of 70-80 m.

Check the calculation and perform the aircraft landing as specified in Section III "Flying the aircraft by day in normal weather conditions".

NOTE: Switch off the de-icing systems of the aircraft and the engines after leaving the icing zone (if possible) or after landing.

S E C T I O N V

NIGHT FLYING

When preparing for night flying as well as for day flight, all the crew members must carry out complete pre-flight inspection of the aircraft. Besides, they must check the aircraft lighting equipment.

- During external inspection check the landing, navigation and formation lights glass caps for condition and cleanliness.

- After landing, check in the cabin the lighting of the instrument panels, consoles and control panels: to do this, switch on the U.V.L., adjust the illumination intensity by rheostats and set the lamps so that all the instruments are well illuminated, check the cockpit white lights for condition; to do this, switch them on by pressing the button on the lamp casing.

- Check the navigation lights for continuous and blinking operation.

- Check the landing lights for condition and the beam direction; to do this, extend the landing lights and switch them on for a short period of time, the light beam should be directed along the aircraft axis, and particularly brightly illuminate the ground at a distance of 40-50 m forward of the aircraft. After checking, switch off and retract the lights.

Declassified in Part - Sanitized Copy Approved for Release 2011/12/14 : CIA-RDP80T00246A064200070001-1

Declassified in Part - Sanitized Copy Approved for Release 2011/12/14 : CIA-RDP80T00246A064200070001-1

- Check the light signs operation and set the required intensity their illumination.

By turning the light caps (fully to the right) dim all the warn- lights, except the lights warning about:

a) fire;

b) max. speed exceeding;

c) fuel reserve for 60 min. and 7 min. of flight.

- Check the formation lights for condition.

Start and test the engines in the usual order.

Taxy the aircraft only along taxi-ways with the aircraft navigation ghts on, set for 30% and 100% light intensity, switching on the land- lights in turn (time of one light continuous illumination must not ceed 5 min.).

On a dark night and at poor visibility, taxy the aircraft with the for- tion lights on. Take-off can be performed with the landing lights ther on or off.

Take-off is performed at night in a way similar to that by day. intain the aircraft heading during the take-off run according to lative movement of the runway lights line - at take-off with the nding lights off, and according to the runway centre line with the nding lights on. After the aircraft comes clear of the ground, do perform floating and continue the flight gradually climbing and creasing the speed; fly the aircraft observing the artificial horizon runway lights, airspeed indicator and rate-of-climb indicator. Before ssing the runway threshold lights change entirely for the instrument ying.

At an altitude of 50-70 m., on the captain's command the flight ineer switches off and retracts the landing lights, if they were tched on. After the aircraft comes clear of the ground, on the cap- 's command, the co-pilot retracts the L.G. and helps the captain to

Declassified in Part - Sanitized Copy Approved for Release 2011/12/14 : CIA-RDP80T00246A064200070001-1

Declassified in Part - Sanitized Copy Approved for Release 2011/12/14 : CIA-RDP80T00246A064200070001-1

ol the aircraft. That time the co-pilot must give particular
tion to maintaining the speed, freedom from banks and maintaining
ake-off heading.

If the aircraft deviates from the normal position during the
the co-pilot must immediately report the captain about it.

altitude not less than 100 m. the co-pilot retracts the flaps
-3 steps.

Night flights are performed, as a rule, only by instruments. It
ot recommended to use the natural horizon even if it is visible.
t flying calls for particular attention and efficiency of the crew.

Circling flying and approach for landing both under normal and
rse weather conditions are performed by the PRS in the "great
ngular pattern" in the same sequence as when flying by day under
rse weather conditions.

Check the beginning of turns by the ARK-5 A.D.F. readings. Per-
m the fourth turn without descent at an altitude not less than
m. so as to decrease bank at the turn end.

During the descent after the fourth turn the captain must pay
ticular attention to maintaining the required speeds and altitudes
n passing the distant and nearest radio stations.

The altitude of the distant radio station passage is 200-250 m.,
the nearest radio station passage - 70 to 80 m.

Maintain the final approach speed not less than 250-230 km./hr.
en the flaps are 35° extended, depending on the wind and the air-
ft take-off weight. After accomplishing the fourth turn descend at
rtical speed of 2-4 m./sec. Switch on the landing lights at an alti-
de of 100-150 m. in a good visibility condition.

Do not use the landing lights during rain, snowfall or haze, as
lo occurs hindering visibility.

Declassified in Part - Sanitized Copy Approved for Release 2011/12/14 : CIA-RDP80T00246A064200070001-1

Declassified in Part - Sanitized Copy Approved for Release 2011/12/14 : CIA-RDP80T00246A064200070001-1

On the captain's command the flight engineer extends or retracts the landing lights.

Float the aircraft before landing only in the strip illuminated by airfield projectors.

Land on the runway illuminated by the projectors as well as during the day flying. After landing switch off the aircraft landing lights.

Landing with the landing lights illuminated on the runway not lighted by the airfield projectors is more difficult and calls for extreme care and experience of the pilot.

If when landing on an airfield not illuminated by the projectors in rain, snowfall or haze, with the landing lights [illegible] occurs which hinders visibility, [illegible] alternate airfield having good weather conditions or [illegible] with projectors.

Maintain the landing run direction according to [illegible] of the runway lights.

Release the propeller pitch stops and brake during landing run [illegible] way similar to the propeller pitch [illegible] and braking [illegible] the day flight.

Switch [illegible] in turn when [illegible] the [illegible] the taxiways.

After taxiing into the parking place, before stopping the engines switch off the landing lights and U.V. lights.

Declassified in Part - Sanitized Copy Approved for Release 2011/12/14 : CIA-RDP80T00246A064200070001-1

Declassified in Part - Sanitized Copy Approved for Release 2011/12/14 : CIA-RDP80T00246A064200070001-1

S E C T I O N VI

ABNORMAL AND EMERGENCY OPERATION

In flight when an engine or propeller constant speed governor fail
ell as in case of an automatic feathering system malfunctioning, a
h negative thrust is imposed on the aircraft which considerably up-
s the control of the aircraft. Therefore in all cases of the engine
lure in flight the flight engineer, by the captain's order, must
ediately feather the propeller and close the engine cut-out valve of
engine failed.

NOTE: Never release the propeller pitch stop during flight, except the cases of the feathering systems failure and necessity to move the propeller to the zero pitch ($\varphi = 0^{\circ}$).

I. SYMPTOMS OF ENGINE FAILURE

The symptoms of engine failure are a progressively developing bank the aircraft and deviation of the aircraft from its heading in the ection of the engine failed.

The failed engine can be determined by the following signs:

- simultaneous pressure drop or violent pressure fluctuations of fuel upstream of the nozzles and reduction in instantaneous fuel sumption as registered by the fuel flow meter;
- pressure drop, as registered by the torque meter indicator;
- engine r.p.m. increase or drop off the permissible limits;
- increase in gas temperature past the turbine;
- oil pressure drop;
- abnormal vibration of a power plant.

Declassified in Part - Sanitized Copy Approved for Release 2011/12/14 : CIA-RDP80T00246A064200070001-1

Declassified in Part - Sanitized Copy Approved for Release 2011/12/14 : CIA-RDP80T00246A064200070001-1

II. ENGINE FAILURE DURING TAKE-OFF RUN

Should any of the engines fail during the take-off run, irrespective whether the propeller is feathered or not, the captain must abort the take-off run as follows:

- preventing the aircraft from turning by means of the rudder, ailerons and brakes, retard all the engine power control levers to 0° as indicated by the [illegible] fuel control lever position indicator;
- on determining which of the engines has failed, release the pitch stops of the propellers of the symmetrically running engines;
- to stop the aircraft, apply the main wheel brakes and, if necessary, use the emergency braking system;
- during the second half of the landing run release the propeller pitch stop of the engine which is symmetrical to that failed.

NOTES: 1. In all events before flight switch on the propeller automatic feathering system.

2. Should the pilot react to the engine failure during the first or the second half of the take-off run in due time, the aborted take-off distance does not exceed [illegible] m. whereas the above mentioned actions of the pilot allow to maintain a straight take-off run.

3. To maintain the proper direction of the aircraft run after the aborted take-off, the captain must use the [illegible] control.

III. ENGINE FAILURE [illegible] OF THE [illegible] WITH THE [illegible] RUNNING

Should an engine fail at take-off [illegible] the aircraft actually loses contact with the ground and becomes airborne (in case of automatic feathering the propeller of the engine failed) the captain must:

Declassified in Part - Sanitized Copy Approved for Release 2011/12/14 : CIA-RDP80T00246A064200070001-1

Declassified in Part - Sanitized Copy Approved for Release 2011/12/14 : CIA-RDP80T00246A064200070001-1

- prevent the aircraft from bank and turn;
- maintain the aircraft at the altitude at which the engine failed 250-260km./hr. I.A.S. is obtained and then start climbing with gradu- increase in airspeed.
- give a command to the co-pilot: "L.G.up";
- at an altitude not below 400 m. and 290 to 320 km./hr. I.A.S. ract the flaps in two or three steps and using the trim tabs unload aircraft control surfaces;
- as soon as 320 km./hr. I.A.S. is obtained, decrease the power the running engines to the normal rating (84° by the VMPT-2 fuel trol lever position indicator);
- move the failed engine power control lever to 0° (by the T-2 indicator) and close the engine cut-out valve;
- gain altitude when circling flying up to 300 - 500 m., set 330 340 km./hr. I.A.S. and perform a landing approach.

NOTE: Should the automatic feathering system of the defective engine fail to function, then the flight engineer by the captain's command feathers the propeller manually by pressing the KM-37 button. Should the propeller fail to be feathered, then, on gaining altitude of about 100 m., feather the propeller by the emergency feathering valve.

Landing the aircraft with the three engines running implies the lowing characteristic features:

- the engine power control lever of the defective engine is to be at 0° (by the VMPT-2 fuel control lever position indicator), and engine power control lever of the engine located symmetrically to defective one is to be set at 16° (by the VMPT-2 fuel indicator);
- the final approach speed is maintained and aiming the aircraft at a ding point is adjusted by changing the power of the symmetrically ning engines;

Declassified in Part - Sanitized Copy Approved for Release 2011/12/14 : CIA-RDP80T00246A064200070001-1

Declassified in Part - Sanitized Copy Approved for Release 2011/12/14 : CIA-RDP80T00246A064200070001-1

- after the aircraft round out, when floating, the engine power control levers of the symmetrically running engines are moved to 0° (by the УПРТ-2 indicator);

-after the aircraft touch-down, during the landing run, the propellers pitch stops of the symmetrically running engines are released when the engine power control lever of the engine symmetrical to the defective one is set at 0° (by the УПРТ-2 indicator); and during the second half of the landing run at a landing speed of 40 to 60 km./hr. the propeller pitch stop of the engine symmetrical to the defective one is released;

- when necessary, the direction of the landing run is maintained by means of the nose L.G. steering control.

IV. MISSED APPROACH PROCEDURE WITH THREE ENGINES RUNNING

The decision to take a missed approach procedure when approaching for landing with the three engines running should be assumed when the aircraft is flying at an altitude of not below 50 m. and an airspeed of not below 260 km./hr.

Having decided to take a missed approach procedure the captain must:

- smoothly and synchronously move the power control levers of the running engines to take-off rating (100° by УПРТ-2 indicator);

- give a command to the co-pilot: "L.G.UP";

- prevent the aircraft from turn and bank in the direction of the engine failed;

- maintain the aircraft flying level till 280 km./hr.I.A.S. then control the aircraft to climb;

- at an altitude not below 100 m. at 300 km./hr. I.A.S. maximum retract the flaps in two to three steps;

- decrease the running engines power to nominal rating (91° by

Declassified in Part - Sanitized Copy Approved for Release 2011/12/14 : CIA-RDP80T00246A064200070001-1

Declassified in Part - Sanitized Copy Approved for Release 2011/12/14 : CIA-RDP80T00246A064200070001-1

УПТ-2 indicator) and repeat the approaching procedure.

The missed-approach procedure with three engines running is not complicated one, but it requires that the crew must control the aircraft with a keener attention, as with three engines running at take-off rating turn and bank moments directed to the side of the defective engine are imposed on the aircraft, which demands that the pilots should effectively control the aircraft.

V. STOPPING ENGINE IN FLIGHT

To stop the engine in flight proceed as follows:

- retard the engine power control lever to the trip catch (16° by УПТ-2 fuel control lever position indicator);
- press and release the АВ-57 propeller feathering button;
- close the engine cut-out valve.

NOTES: 1. When necessary, the propellers may be feathered at any engine power rating.

2. Should the feathering system actuated from the АВ-57 propeller feathering button fail to operate, feather the propeller and stop the engine by means of the emergency feathering system manual control valve.

When stopping the engine by feathering its propeller a bank moment imposed on the aircraft which can be easily eliminated by deflection the rudder and ailerons. In this case the control surfaces deflection forces are not large and are easily counteracted by the appropriate deflection of the rudder and aileron trim tabs.

Declassified in Part - Sanitized Copy Approved for Release 2011/12/14 : CIA-RDP80T00246A064200070001-1

Declassified in Part - Sanitized Copy Approved for Release 2011/12/14 : CIA-RDP80T00246A064200070001-1

VI. ENGINE FLIGHT RE-START

The engine may be re-started in flight only in emergency, when being quite trouble free it has been stopped for the purpose of training, through the faults of the crew or due to some other reasons which cannot result in damage to the engine.

Never start the engine in flight under icing conditions.

[illegible]

The engine starting is performed by the captain together with the flight engineer.

Re-start the АИ-20 engine in flight at [illegible] to [illegible] [illegible] altitude of [illegible] to [illegible] [illegible] in the following sequence:

- Check up the oil contents in the [illegible] engine being [illegible] the oil contents should be not less than 40 litres.
- Set the engine power control [illegible] [illegible]
- [illegible] that the [illegible] [illegible]
- [illegible] the engine [illegible]
- [illegible] switch in [illegible]
- [illegible] switch [illegible] [illegible] [illegible]
- Set the flight re-start switch in the [illegible] [illegible] to ten [illegible] to provide sparking the [illegible] [illegible] of the КПН-4 [illegible] [illegible] the СМУ-7 intercommunication system as interference)
- [illegible] the [illegible] partially in increments by pressing the

Declassified in Part - Sanitized Copy Approved for Release 2011/12/14 : CIA-RDP80T00246A064200070001-1

Declassified in Part - Sanitized Copy Approved for Release 2011/12/14 : CIA-RDP80T00246A064200070001-1

M-37 propeller feathering button till the engine speed of 15 to 20% obtained.

Should the engine slowly develop the speed of 15 to 20% and the temperature past the turbine rapidly increase, continue intensively eathering the propeller by means of the KOM-37 feathering button l the engine speed of 25 to 30% is obtained and the gas temperature t the turbine ceases to increase, then release the button;

- switch off the "FLIGHT RE-START" switch after the engine develops operating speed of 95 to 96% at zero reading on the VUPT-2 fuel trol lever position indicator, then smoothly move the engine power trol lever to 16° (by the VUPT-2 indicator), and then to the posi-n corresponding to the required rating.

When re-starting the engine in flight during unfeathering the opeller, a turning moment directed to the side of the engine being arted is imposed on the aircraft, and the subsequent rapid increase the engine r.p.m. results in a jerk to the opposite side, which can easily counteracted by the appropriate deflection of the control faces.

NOTE: If, during unfeathering the propeller at the engine speed of 15 to 20%, the starting fuel is not ignited (which can be determined by the readings of the gas temperature past the turbine), stop starting the engine, close the engine cut-out valve, feather the propeller and switch off the "FLIGHT RE-START" switch. Two to three minutes later repeat starting the engine.

VII. ENGINE FAILURE IN FLIGHT

Should one of the engines (inboard or outboard) fail in flight, hen the engines operate at a rating below 0.7 normal power, the cap-ain must:

Declassified in Part - Sanitized Copy Approved for Release 2011/12/14 : CIA-RDP80T00246A064200070001-1

Declassified in Part - Sanitized Copy Approved for Release 2011/12/14 : CIA-RDP80T00246A064200070001-1

- prevent the aircraft from bank and turn by the appropriate deflection of control surfaces;

- determine which of the engines failed;

- give a command to the flight engineer to feather the propeller of the defective engine. Feather the propeller by pressing the VISH-37 feathering button and simultaneously perform feathering by operating handle of the emergency hydraulic feathering system;

- increase the power of the running engines to maintain a required flight condition;

- using the trim tabs unload the aircraft controls.

With one of the engines (inboard or outboard) failed in flight, appearing turn and bank directed to the failed engine side can be easily counteracted by the rudder and ailerons.

The controls forces are fully eliminated by the trim tabs. Flying with three engines running and with a failed engine propeller feathered is not a complicated matter.

When flying with three engines running and a failed engine propeller feathered the IL-62 aircraft has sufficient thrust, stability and controllability to continue level flight and climb.

Perform climbing with all three engines running at normal rating (by the [illegible] indicator), with the take-off weight of 54 tons, the speeds indicated in the table below.

Table 5.

Altitude, m.	0	2,000	4,000	6,000	8,000
I.A.S., km/hr.	340	340	340	330	310
Time, min.	0	5.6	12	20	33

Declassified in Part - Sanitized Copy Approved for Release 2011/12/14 : CIA-RDP80T00246A064200070001-1

Declassified in Part - Sanitized Copy Approved for Release 2011/12/14 : CIA-RDP80T00246A064200070001-1

WARNING: At an extended flight with three engines running and the feathered (from the [illegible] feathering button or automatically) propeller of an engine failed, the propeller might unfeather itself. In this case feather the propeller additionally by pressing the [illegible] feathering button.

VIII. FAILURE OF TWO ENGINES LOCATED ON ONE HALF WING

In case of failure of the engines running at a rating above 0.7 normal power (61° by the [illegible]-3 indicator), the propellers should be feathered automatically within two or three seconds.

If the failure occurred at a rating below 0.7 normal power, the propellers would not be feathered automatically.

In this case feather the propellers manually by means of the [illegible] feathering buttons, or, should the propellers fail to be feathered, by means of the emergency feathering system.

When flying with two engines, located on one half wing, running and with the propellers of the defective engines feathered, the AN-12 aircraft has sufficient thrust, stability and controllability to continue level flight and climb, to perform turns to the sides of both the running and failed engines or to land on the nearest airfield.

When two engines located on one half wing fail in flight the captain must:

- prevent the aircraft from bank and turn by the appropriate deflection of the control surfaces;

- determine which of the engines have failed;

- order the flight engineer to feather the propellers of the engines failed, if they failed to be feathered automatically;

Declassified in Part - Sanitized Copy Approved for Release 2011/12/14 : CIA-RDP80T00246A064200070001-1

Declassified in Part - Sanitized Copy Approved for Release 2011/12/14 : CIA-RDP80T00246A064200070001-1

- increase the power of the running engines up to a value required maintain the aircraft flying speed;
- using the trim tabs eliminate the control forces;
- retract the L.G. and flaps if extended;
- if it is necessary to perform an extended flight with two engines nning, provide even fuel consumption from both the L.H. and R.H. fuel nk groups by opening the cross-feed valve and switching off the pumps the tanks with smaller fuel contents.

When circling flying with two defective engines located on one lf wing maintain [illegible] 320 to 340 km. hr. I.A.S., with the control rces being fully eliminated by the trim tabs.

When flying with the two one-side engines defective at take-off normal rating the rudder control force is not fully eliminated by e trim tab.

I. Landing Approach and Landing with two one-side engines Failed in Flight

During landing approach extend [illegible] the [illegible]

Extend or retract the L.G. with the left hand engines [illegible] and [illegible]) defective normally from the [illegible] system.

With the right hand engines [illegible] failed, extend the [illegible], as in [illegible] from the [illegible] system.

Turn the aircraft to the side of the engines failed [illegible] not more than 10 to 15°.

Perform the fourth turn at a speed of [illegible] to [illegible] km./hr. so [illegible] recover the aircraft from the turn at an altitude of not less than [illegible] to 400 m.

After the fourth turn the aircraft is manoeuvred to a shallow descent so as to pass the distant radio station at an altitude of not

Declassified in Part - Sanitized Copy Approved for Release 2011/12/14 : CIA-RDP80T00246A064200070001-1

Declassified in Part - Sanitized Copy Approved for Release 2011/12/14 : CIA-RDP80T00246A064200070001-1

[illegible] than 300 m. (if the radio station is located 4 km. away from the [illegible]unway) and the aircraft is trimmed by lessening the rudder and wh[illegible]rong trim tabs deflection two to three pulses in the direction of [illegible]eir neutral position).

In this case the rudder pedals and control wheel forces somewhat [illegible]ncrease, but with the further decrease in the engine rating the forces will decrease too and during the aircraft landing will be small.

2. After passing the distant radio station, at 300 km./hr. [illegible]...s. extend the flaps 20 to 25°, and after passing the nearest radio station, [illegible]ng sure that the landing approach is made precisely, extend the [illegible] to 35°.

[illegible]. The time required to extend the flaps with two operating engines (R.H. or L.H.) failed increases approximately to 42 seconds.

At the beginning of roundout the aircraft indicated air speed should be 260-270 km./hr.

At the end of **floating**, before landing, smoothly move the power control levers of the running engines to 16° (by the УПРТ-2 [illegible] control lever position indicator) i.e. to the trip catch. After landing, retard the inboard engine power control lever and then the outboard engine power control lever 0° (by the УПРТ-2 indicator).

The tendency of the aircraft to turn to the side of the failed engines during the landing run is counteracted by the wheel braking and, when necessary, by the nose L.G. steering.

When the L.H. engines (No.3 and No.4) fail perform the nose L.G. steering and emergency braking by means of the L.H. system, via the cross-feed valve. Open the cross-feed valve after extending the L.G. and flaps.

At the end of the landing run at a speed of approx. 60 km./hr.

Declassified in Part - Sanitized Copy Approved for Release 2011/12/14 : CIA-RDP80T00246A064200070001-1

Declassified in Part - Sanitized Copy Approved for Release 2011/12/14 : CIA-RDP80T00246A064200070001-1

ase the propellers pitch stops of the running engines (first the ard engine, then the outboard one).

NOTE: To reduce the controls forces when flying with two one-side engines failed and especially when approaching for landing, it is reasonable to somewhat reduce the outboard engine power and maintain the required flight condition by increasing the inboard engine power.

2. Missed Approach Procedure with Two One-side Engines Failed

Missed approach procedure with two defective engines located on half wing is possible, but it should be performed only in excep-nal cases. In such a case the flight altitude should be not less n 100 m., the indicated air speed - not less than 280 km./hr. and flaps should be extended not more than [illegible] to 25°.

When taking a missed approach procedure the captain must immedia-y set the running engines at take-off rating ([illegible]° by the [illegible]-2 dicator) and give a command to the co-pilot to retract the L.C.

The most complex phase of the missed approach procedure with two e-side engines running is the moment of moving their power control vers to 100° (by the [illegible]-2 indicators).

Considerable bank and turn moments, directed to the side of the fective engines, are imposed on the aircraft in this case. The cond ol forces are rather large, the rudder is fully deflected, the lerons deflection corresponds to 1/2 turn of the control wheel, and e aircraft vibration occurs.

On retracting the L.C. the speed rapidly increases, the control rfaces deflection decreases, the aircraft vibration ceases. Retract e flaps in two or three steps to avoid abrupt loss of altitude.

Declassified in Part - Sanitized Copy Approved for Release 2011/12/14 : CIA-RDP80T00246A064200070001-1

Declassified in Part - Sanitized Copy Approved for Release 2011/12/14 : CIA-RDP80T00246A064200070001-1

IX. FLYING WITH OUTBOARD ENGINE PROPELLER WINDMILLING

1. Propeller Pitch Stop Not Released

When the engine power is lost and feathering system fails to rate the propeller starts windmilling.

When the propeller of the engine failed starts windmilling, a e turning moment is imposed on the aircraft, resulting in a jerk bank of the aircraft to the side of the engine failed with 20 to km./hr. decrease in the airspeed.

To prevent the wing drop the captain must immediately do as lows:

- hold the aircraft in straight level flight by the appropriate lection of the aircraft controls;
- maintain the indicated air speed of not less than 310 to km./hr. by adjusting the power of the running engines: for symmetally running engines - normal or take-off rating (84° to 100° by VUPT-2 indicator), for the engine symmetrical to the failed - 30° to 40° by the VUPT-2 indicator;
- using the trim tabs eliminate the control forces;
- move the windmilling engine power control lever to 0° (by the PT-2 indicator), close the engine cut-out valve and the shut-off ve.

Maximum control force when the propeller passes over to windmilg, is 90 kg. for the rudder control and 30 kg. for the ailerons trol.

The ailerons control forces are fully removed by the trim tabs, rudder control forces are reduced.

During windmilling of the outboard engine propeller, whose pitch p is not released (φ =12°), the level flight with the L.G. and

Declassified in Part - Sanitized Copy Approved for Release 2011/12/14 : CIA-RDP80T00246A064200070001-1

Declassified in Part - Sanitized Copy Approved for Release 2011/12/14 : CIA-RDP80T00246A064200070001-1

retracted is possible at 300 to 330 km./hr. [illegible] and altitude 4,000 m.

In this case perform turns to the side of the failed engine as to the side of the running engine with a bank of not more 10 to 15°.

With the L.G. extended the aircraft descends with a vertical speed to 3 m./sec., whereas with the L.G. and flaps set for landing the ical speed increases up to 5 to 7 m./sec.

NOTE: It is not recommended to adjust power of the engine symmetrical to that failed in excess of 30 to 40° (by the [illegible] indicator) as the airflow separation may occur at the tail unit when the rudder deflection angle is large, which results in the aircraft severe vibration.

In all events when, with one of the engines failed, the rudder required to be deflected through more than 16° at approx. 350 km./hr. I.S. or below, eliminate the tail unit vibration by a bank up to ° to the side of the running engines with subsequent decrease in the dder deflection angle.

2. Propeller Pitch Stop Released

If the propeller pitch stop release system operates reliably, then er the propeller starts windmilling release the propeller pitch p.

In this case bear in mind, that when releasing the propeller pitch p, provided the propeller pitch stop was on, the negative thrust reases momentarily, which results in additional turn and bank moments osed on the aircraft. Then with decrease in the propeller speed the gative thrust decreases sharply and becomes lower than that with the peller secured by the pitch stop. Then the aircraft flying speed l somewhat increase.

Declassified in Part - Sanitized Copy Approved for Release 2011/12/14 : CIA-RDP80T00246A064200070001-1

Declassified in Part - Sanitized Copy Approved for Release 2011/12/14 : CIA-RDP80T00246A064200070001-1

duce the growing moment and bank imposed on the aircraft when the eller pitch stop is released, before releasing the propeller pitch fly the aircraft at a bank of 10 to 15° to the side opposite to windmilling engine. The level flight with a windmilling propeller n outboard engine (propeller pitch stop released) and with L.G. flaps retracted may be performed at 300 to 350 km/hr. I.A.S., which its to continue flying and to land the aircraft on the nearest odrome.

NOTE: On releasing the propeller pitch stop of the failed engine (inboard or outboard) to move the propeller to $\varphi = 0°$ set the propeller pitch stop control switch to the "PROP. PITCH STOP ON" position because the propellers pitch stops release systems of the outboard and inboard engines are interlocked.

3. Landing Approach and Landing with Outboard Engine Propeller Windmilling ($\varphi = 0°$)

Perform circling flying at an indicated air speed of 320 to 340km/hr.

To reduce the turning moment and rudder control force, decrease wer of the engine, symmetrical to that failed, to 30-40° (by the PT-2 indicator).

Extend the L.G. before the third turn.

Perform the fourth turn at 310-330 km./hr. I.A.S. with a bank of t more than 15°.

After the fourth turn control the aircraft to shallow descent so at the aircraft passes the distant radio station at an altitude of t more than 300 m.

Trim the aircraft by decreasing the rudder and ailerons trim tabs flection moving them to the neutral position in 2 or 3 increments.

Declassified in Part - Sanitized Copy Approved for Release 2011/12/14 : CIA-RDP80T00246A064200070001-1

Declassified in Part - Sanitized Copy Approved for Release 2011/12/14 : CIA-RDP80T00246A064200070001-1

When passing over the distant radio station at 300 to 320 km./hr. S. extend the flaps (in two to three steps) through a 20-25° angle perform final approach at 280 to 290 km./hr. I.A.S.

When flying over the nearest radio station make sure that the raft is aimed precisely and extend the flaps 35°.

By the time the roundout begins maintain the indicated air speed in 260 to 270 km./hr. and the engine rating corresponding to 16° the УПРТ-2 indicator). At the end of the roundout retard the power trol lever of the engine symmetrical to the windmilling engine to (by the УПРТ-2 indicator), then after touchdown retard the power trol levers of the symmetrically running engines to 0° (by the T-2 indicator), and release their propellers pitch stops. To ntersct the aircraft tendency to turn to the side of the windmilling ine apply the L.G. wheel brakes and, when necessary, use the nose l manual steering control.

Release the propeller pitch stop of the engine symetrical to the drilling engine at the end of the landing run at a speed of approx. to 30 km./hr.

NOTE: In case of failure of an inboard engine when its propeller starts windmilling considerably lower bank and turn moments are imposed on the aircraft than those appearing in case of the outboard engines failure, which facilitates the aircraft control.

K. CONTROLLING AIRCRAFT AT LARGE ANGLES OF ATTACK

1. The AN-12 aircraft has a sufficient stability at large angles ttack within the C.G. operating range with the L.G. and flaps re- ted or extended.

Declassified in Part - Sanitized Copy Approved for Release 2011/12/14 : CIA-RDP80T00246A064200070001-1

Declassified in Part - Sanitized Copy Approved for Release 2011/12/14 : CIA-RDP80T00246A064200070001-1

2. In all the flight conditions the aircraft has no reliable signs ve the pilot some warning of the approach of stalling.

WARNING: Never decrease the [illegible] air speed at level flight:

below 280 km./hr. up to 6,000 m. altitude,

below 300 km./hr. from an altitude of [illegible] m.

up to the service ceiling.

When approaching the stalling condition at the minimum speed (See [illegible], with the [illegible] flaps [illegible] when the speed is [illegible] to m./hr. more than the stalling [illegible] slight vibration of the [illegible] t occurs.

The aircraft stalls at the minimum [illegible] speed with the [illegible] extend- [illegible] the flaps extended 25° or [illegible]° without any [illegible] vibration.

[illegible] approaching the minimum [illegible] in direct proportion to the [illegible] [illegible] [illegible] [illegible] [illegible]

[illegible]

[illegible]

[illegible] of 47 to [illegible]

[illegible] m.	[illegible] km./hr.	[illegible]	[illegible]	[illegible]
[illegible]	[illegible]	84		[illegible]
[illegible]	[illegible]			[illegible]
[illegible]	[illegible]	[illegible]	[illegible]	extended
[illegible]	[illegible]	[illegible]		extended
[illegible]	[illegible]	20		[illegible]
[illegible]	[illegible]	24		[illegible]

Declassified in Part - Sanitized Copy Approved for Release 2011/12/14 : CIA-RDP80T00246A064200070001-1

Declassified in Part - Sanitized Copy Approved for Release 2011/12/14 : CIA-RDP80T00246A064200070001-1

3. The aircraft stalls not only when the speed reduces to the ...ling speed but also when positive overloads are obtained within ...whole range of operating speeds as a result of an abrupt pulling ...the control column or due to the effect of the vertical airflow on ...aircraft when flying in a turbulent air under severe bumpy air ...ditions.

In this case the nature of the aircraft stalling depends on the ...ght altitude and Mach number. At small Mach numbers (up to 0.45 to ...5) a smooth stall occurs with a wing drop (especially left wing)and ...e fuselage nose down. At Mach numbers of 0.55 to 0.69 a rapid stal...g appears with the wing drop, fuselage nosedown and considerable ...oration of the aircraft in the moment of stall. With reduction in ...e flight altitude the stall becomes more violent.

4. Severe bumpy air zones at mean and high altitudes may occur ...clouds and under good weather conditions as well. When suddenly en...ring a severe bumpy air zone at an altitude exceeding 6,000 m. imme...iately stop climbing (if the climb was being executed), switch off ...e automatic pilot (if it was on), maintain the indicated air speed ...rresponding to M=0.52-0.56 (with L.G. and flaps retracted) evaluate ...e conditions and plan the route to escape from the bumpy air zone.

If the aircraft cannot be controlled because of severe jerks, ...duce the flight altitude but avoid a thunderstorm clouds.

When flying at an altitude near the service ceiling in the bumpy ...r zone reduce the flight altitude some 1,000-2,500 m.

When flying in the bumpy air zone at an altitude below 6,000 m. ...intain the indicated air speed of 440 to 480 km./hr.

Under bumpy air conditions do not change the air speed below or ...ove the specified value and do not perform manoeuvres with overload ...ove 1 g as the danger of stall becomes more likely.

5. On entering the bumpy air zone to maintain a specified flight, ...e pilot must operate the control surfaces only to prevent considerable

Declassified in Part - Sanitized Copy Approved for Release 2011/12/14 : CIA-RDP80T00246A064200070001-1

Declassified in Part - Sanitized Copy Approved for Release 2011/12/14 : CIA-RDP80T00246A064200070001-1

ations from the established flight condition, without counteracting
r jerks so as to avoid further sh king of the aircraft. To improve
aircraft position never allow abrupt longitudinal movements of the
rol column, especially pull-out.

The pilot's untimely operation of the aircraft controls, when
y vertical gusts affect the aircraft, may result in stalling of
aircraft which is characterized by:

- flying speed reduction;
- uncontrollable throw from bank to bank at Mach number exceeding
;
- spontaneous bank of aircraft or nose lowering;
- decrease in the aircraft controls effectiveness.

When the aircraft reaches the stalling condition, the pilot must
ediately and energetically push the control column to fly the air-
ft at operating angles of attack with subsequent moving the pedal
control wheel to eliminate the bank . With a stalling vibration of
wing never counteract the aircraft banking jerks by operating the
erons and rudder. As soon as a spontaneous bank is eliminated return
elevator to a position close to the balanced one, and with increase
flying speed smoothly control the aircraft to fly level.

An abrupt pulling out the control column, to, reduce the angle of
cent when the flying speed does not rise sufficiently, may result in
epeated stall.

6. To recover the aircraft from condition approaching the stal-
g at minimum speed at all the altitudes where the warning vibration
s not appear, immediately push the control column past the neutral
ition and at the same time prevent the aircraft from bank by ope-
ing the rudder and ailerons.

7. The main instrument which indicates the actual attitude of the

Declassified in Part - Sanitized Copy Approved for Release 2011/12/14 : CIA-RDP80T00246A064200070001-1

Declassified in Part - Sanitized Copy Approved for Release 2011/12/14 : CIA-RDP80T00246A064200070001-1

raft under bumpy air conditions is the artificial horizon, whereas turn-and-bank indicator, air speed indicator and altimeter are illiary instruments.

Flying in a thunderstorm zone under conditions of a [illegible] siderable bumping may be sometimes accompanied by improper functioning of a certain group of instruments/altimeters, rate-of-climb dicators, air speed indicators/. Under these conditions the established flight condition may be achieved by maintaining a constant ing of the engines (by observing the [illegible] fuel control lever dition indicator reading) and a constant pitch angle by observing e artificial horizon indication.

8. Control the aircraft, when recovering from a descent due to e stall at minimum speed, by smoothly pulling out the control column soon as the indicated air speed reaches 280 to 300 km./hr. with U.C. and flaps retracted and 220 to 240 km./hr. with U.C. extended and aps set at 35° preventing the aircraft from approaching the stalling ndition for the second time.

9. Check up the aircraft attitude when recovering the aircraft om stall by observing the natural horizon at night and during instrument flying observe the artificial horizon and bank-and-turn indicator.

Should a progressive bank develop under the action of heavy and stable movement of the air masses, the pilot must immediately eliminate the bank by means of the ailerons; if the aircraft is not affected by the stalling vibration, maintain the heading by observing the rectional gyro indication.

Enter a new heading in the moment when bumping is reduced by rforming subsequent, short, coordinated turns of the aircraft with bank of 5 to 15°.

When a quick turn is required, perform it with a descent, but th a bank of not more than 20°.

Declassified in Part - Sanitized Copy Approved for Release 2011/12/14 : CIA-RDP80T00246A064200070001-1

Declassified in Part - Sanitized Copy Approved for Release 2011/12/14 : CIA-RDP80T00246A064200070001-1

0. If, after stalling at high altitudes the aircraft falls into
ady normal spin which is characterized by the following para-
rs: angle of attack - 35° to 40°; rate of roll - 45 to 90 deg./sec.;
of a spin turn - approx. 7 to 8 sec.; vertical speed at descent -
to 140 m./sec., then it is necessary to:

- determine the direction of spinning and fully deflect the con-
surfaces according to the spin (in case of the L.H. spin deflect
rudder to the right, in case of the R.H. spin deflect the rudder
he left, pull out the elevator fully, set the ailerons in neutral
ition);

- permit the aircraft to accomplish 1.5 to 2 spin turn (4 to 6 sec.)

- fully deflect the control surfaces to recover from the spin by
ns of a conventional method (deflect the rudder to the left at the
. spin and to the right at the R.H. spin), and, on accomplishing
or 1 spin turn after the rudder deflection, fully push the elevator
trol lever with the ailerons set in neutral position;

- wait for the rotation to cease within not less than two turns
e aircraft loses 900 to 1,200 metres per turn).

If rotation ceases at any stage of recovering from the spin,
mediately set all the control surfaces to the neutral position and
over the aircraft from a descent to a level flight ensuring that
indicated air speed and overloads are maintained within specified
nits (if necessary, move the power control levers of all the engines
the trip catches - 16° by the УПРТ-2 fuel control lever position
icator).

When employing this method of the aircraft control see that the
craft recovers from a spin without any delay.

Declassified in Part - Sanitized Copy Approved for Release 2011/12/14 : CIA-RDP80T00246A064200070001-1

Declassified in Part - Sanitized Copy Approved for Release 2011/12/14 : CIA-RDP80T00246A064200070001-1

OTE: A case of AH-12 aircraft falling into a spin is most unlikely. One must clearly distinguish a stall from a steady spin. During a stall at any flight condition the AH-12 aircraft readily recovers from a stall losing 100to 500 metres of altitude, if the pilot acts properly.

I. FLYING WITH TAIL EMERGENCY ESCAPE DOOR OPENED

Opening of the tail emergency escape door in flight imposes a iderable diving moment on the aircraft, especially at 450 to km./hr. I.A.S.

To maintain the aircraft flying level at 450 to 500 km./hr. I.A.S. rce of 40 to 50 kg. is required to be applied to the control mn.

Table 7.

for flying at 4,000 m. altitude

S. with the aft trimmed vel flight, /hr.	280	320	350	[illegible]	450	[illegible]	[illegible]
ol column , kg.	-22	-26	-30	-38	[illegible]	-48	[illegible]

his force can be easily counteracted by the trim tab. The trim tab tion is very small: one to two scale divisions.

pening of the cockpit emergency escape door does not practically ct the aircraft behaviour.

pening of the cargo door at 200 to 350 km./hr. I.A.S. also does ractically affect the aircraft behaviour. However, at 350 to m./hr. I.A.S. the aircraft vibration is observed which then in es with increase in the flying speed. When opening or closing the

Declassified in Part - Sanitized Copy Approved for Release 2011/12/14 : CIA-RDP80T00246A064200070001-1

Declassified in Part - Sanitized Copy Approved for Release 2011/12/14 : CIA-RDP80T00246A064200070001-1

door in flight at the speed of 350 to 520 km./hr. the aircraft which can be easily counteracted by the control surfaces.

XII. LANDING WITH L.G. DEFECTIVE

1. In all events of the L.G. control system failure the captain use all the opportunities available to extend the L.G., i.e. he try again to extend the L.G. by means of the main system, emergency m and hand pump.

Making sure that the L.G. fails to be extended the captain must t the airport traffic controller about the L.G. condition and a decision of landing.

Land the aircraft with the L.G. retracted on a specially intended surface strip or (in case of a forced landing) outside the aero- e on the ground.

Before approaching for landing the radio operator must switch on emergency power supply and switch off all the [illegible] generators e altitude of 50 to 70 metres. The "AIRCRAFT-[illegible] POWER" ch must be in "AIRCRAFT" position. At landing approach the navigator o operator and flight engineer must occupy places in the cargo ndants' cabin.

When landing retard the power control levers of all the engines o (by the [illegible] indicators), close the engine cut-out valves and shut-off valves. After landing, before the crew members leave the raft, de-energize the aircraft electrical system by the "BATTERY GENCY SUPPLY OFF" switch.

2. When landing with the main L.G. extended and the nose L.G. re- ted, prevent the fuselage nose section from touching the ground as as possible, then smoothly lower the aircraft nose onto the nd.

Declassified in Part - Sanitized Copy Approved for Release 2011/12/14 : CIA-RDP80T00246A064200070001-1

Declassified in Part - Sanitized Copy Approved for Release 2011/12/14 : CIA-RDP80T00246A064200070001-1

3. When landing with the nose L.G. extended (provided it cannot be ...ted), prevent the aircraft from landing at a small angle of at- ...and avoid a hard striking of the nose wheels against the ground.

4. Should one of the main L.G. legs fail to be extended, land the ...aft with the L.G. retracted and the cargo door opened.

NOTE: Should the L.G. fail to be secured by the down lock when a decision is made to land with the L.G. extended, perform landing with the L.G. control valve set in the "DOWN" position.

XIII. BAROMETRIC INSTRUMENTS FAILURE

Should the captain's barometric instruments fail, determine what ...ly system of these instruments has failed: either the dynamic or ...ic pressure system. In case of the dynamic pressure system failure ...readings of the КУС-1200 airspeed indicator and the МС-1 Machmeter ... be distorted, whereas the readings of the ВД-10 altimeter and the ...30-3 rate-of-climb indicator readings will correspond to the estab- ...ed flight condition. When the static pressure system fails, the ...ings of all the barometric instruments during a descent or climb ... be destorted.

Failure of the barometric instruments static pressure supply sys- ...may occur because of the two reasons:

- freezing of the static pressure inlet hole or pipeline;
- poor tightness of the static pressure pipeline.

When the static pressure inlet hole or pipeline are frozen, then ...ng a descent (relative to the altitude at which the instrument has ...ed) the airspeed incidator readings will considerably exceed the ...al readings for a given flight condition, and during climbing they ... be reduced.

Declassified in Part - Sanitized Copy Approved for Release 2011/12/14 : CIA-RDP80T00246A064200070001-1

Declassified in Part - Sanitized Copy Approved for Release 2011/12/14 : CIA-RDP80T00246A064200070001-1

he rate-of-climb indicator and altimeter will not respond to alti-
ariations, their reading will be constant (ВАР-30-3 rate-of-climb
tor readings will be close to zero, and ВД-10 altimeter read-
ill indicate the altitude at which the system has failed).
When continuing the level flight at the altitude where the static
ure system failed, the failure may be not noticed by the pilots
e КУС-1200 airspeed indicator readings will be close to nor-
nes, a constant altitude will be registered on the ВД-10 altimeter,
he rate-of-climb indicator pointer will be against zero.
In case of poor tightness of the static pressure pipeline when
g with the cabin pressurized the readings of the КУС-1200 airspeed
ator and ВД-10 altimeter will be reduced, as the static pres-
in this case will be supplied from the cabin, and the cabin al-
e will be lower than the actual altitude of flight.
In determining, which of the systems has failed and making sure
the copilot's barometric instruments operate normally, switch over
copilot's barometric instruments supply system to feed the barometric
instruments of the captain by operating the selector valves of
ic or dynamic pressure (depending on which of the systems failed).
In case of abnormal operation of the copilot's barometric instru-
s (freezing of the static pressure inlet holes or pipeline heat-
system), switch over the emergency static pressure intake to the
ain's instruments.
The valves connecting the captains barometric instruments supply
em to the co-pilot's instruments supply system and to the emergency
ic pressure intake (three separate valves) are located on the fusel
port side, aft of the captain's seat.

Declassified in Part - Sanitized Copy Approved for Release 2011/12/14 : CIA-RDP80T00246A064200070001-1

Declassified in Part - Sanitized Copy Approved for Release 2011/12/14 : CIA-RDP80T00246A064200070001-1

XIV. CREW ACTIONS IN FLIGHT IN CASE OF CABIN AIR SYSTEM FAILURE

1. Should the cabins pressurization system be defective but the of the cabins is not affected. do not cut off the cabin pressu-ion to avoid missing of the window panels.

2. In case of fire on one of the engines cut off the air bleed this engine. If the smoke or smell of burning penetrates into the s, cut off the air bleed from the engines. With the cabin pressu-ion system off the crew members must use oxygen masks.

3. To decompress the forward cabin in emergency set the emergency pression control switch in the "DECOMPRESSION" position, and set APM-54 selector switch to the "COMBAT CONDITION" position, cut the air-to-cabin supply, set the emergency escape door sealing r to the "UNSEALED" position.

When the differential pressure reaches 0.2 atm. open the small win in the door in the pressure bulkhead.

If it is necessary to decompress the gunner's cabin in emergency, the escape door sealing lever to the "UNSEALED" position and set cabin pressurization cut off valve in the "CLOSED" position.

4. When the cabin pressure exceeds 0.455 kg./cm^2, with the relief ve adjusted for this pressure, cut off the air bleed from the engines descend the aircraft to the altitude of 3,500 m. At this altitude tch on the emergency decompression system, decompress the cabin, tch on the cabin pressurization system and continue flying to the nt of destination without cutting off the emergency decompression tem. In case of the cabin pressure increase with the emergency de-pression on, stop pressurizing the cabin and continue flying to the rest airfield.

Declassified in Part - Sanitized Copy Approved for Release 2011/12/14 : CIA-RDP80T00246A064200070001-1

Declassified in Part - Sanitized Copy Approved for Release 2011/12/14 : CIA-RDP80T00246A064200070001-1

Should cracks appear in the window panels or the fuselage
re out off the air bleed from the engines, perform emergency de-
sion of the cabin and carry out all the instructions given
para.4 of this Section.
all events prior to decompressing the pressurized cabins the
embers must use oxygen masks.
. Before leaving the forward pressurized cabin for the cargo com-
nt open the small window in the pressure bulkhead door before
g the door, to equalize the pressure in the forward cabin and
compartment.

XV. FIRE IN FLIGHT

1. If the fire extinguishing system functions properly, then in
of fire in the engine compartments or fuel tank compartments the
irst group fire extinguishers are automatically discharged into
ire zone. Simultaneously illuminates the red warning light in the
n corresponding to the fire zone and go out the two warning lights
e first group fire extinguishers installed on the fire extinguish-
control panel (on the left part of the central instrument panel)
indicating the fire extinguishers actuation.
2. When detecting the engine fire the captain must perform an
diate descent and descend the aircraft down to the minimum safe
tude (depending on the weather conditions and terrain) and fly
aircraft at this altitude to the nearest airfield for landing.
Simultaneously the captain must give a command to feather the
ller, to use the fire extinguishing system and retard the engine
r control lever to 0° (by the [illegible] indicator).
By the captain's command the flight engineer must:
- feather the propeller by means of the [illegible] feathering button

Declassified in Part - Sanitized Copy Approved for Release 2011/12/14 : CIA-RDP80T00246A064200070001-1

Declassified in Part - Sanitized Copy Approved for Release 2011/12/14 : CIA-RDP80T00246A064200070001-1

diately repeat feathering by means of the hydraulic feathering
handle;
close the shut-off fuel valve;
open the fire extinguishers control buttons guard cap and press
o buttons to discharge two fire extinguishers simultaneously
mber lights of the fire extinguishers actuated will go out).
The co-pilot must cut off the air bleed from the engine on which
ire occurred.
15 minutes later check the results of fire-fighting; to do this,
he master switch of the fire extinguishing system to "OFF" position
ubsequently move it to the "FIRE EXTING." position.
If after checking up the warning light in the button does not
on it means that the fire in the given zone is extinguished.
wise discharge simultaneously two more fire extinguishers.
3. In case of fire in the wing fuel tank compartments the pilot

15 minutes after the two fire extinguishers are actuated (after
first group fire extinguishers amber lights go out) check the
lts of fire fighting; to do this, set the master switch of the
extinguishing system to "OFF" position and then to "FIRE EXTING."
tion.
If after checking up the results of fire fighting (after switching
and on the master switch of the fire extinguishing system) the red
t in the button becomes illuminated again, the pilot must discharge
two other fire extinguishers manually and 15 minutes later must
k up the results of fire fighting again.

NOTES: 1. Illumination of the red light in the button indicates that the corresponding solenoid distribution valve is opened; after the fire is extinguished the light does not go out.

Declassified in Part - Sanitized Copy Approved for Release 2011/12/14 : CIA-RDP80T00246A064200070001-1

Declassified in Part - Sanitized Copy Approved for Release 2011/12/14 : CIA-RDP80T00246A064200070001-1

2. Do not set the master switch to "OFF" position earlier than 15 minutes after the fire extinguisher actuation, as in this case the pressure built up in the pipeline, when the system is switched on, prevents the solenoid distribution valve from opening.

When the fire is detected but the fire detectors are not actuated the pilot must:

a) In case of engine fire:

- Press the button with the light (located on the fire extinguisher control panel) for the corresponding engine (compartment) the light of illumination will indicate that the corresponding valve in the distribution is opened. The first group fire extinguishers will be actuated which will be indicated by the amber lights going out.

- Perform the operations given in para.2 of this section in the same order.

b) In case of fire in the wing fuel tank compartments:

- Press the button with the light (on the fire extinguishing control panel) for the corresponding compartment in which illumination of the will indicate that the corresponding solenoid distribution valve is opened.

The first group fire extinguishers will be actuated which will be indicated by the amber lights going out.

- Perform the operations indicated in para.2 of this section in the same sequence.

WARNING: On detecting the fire and after extinguishing the fire the captain must order one of the crew members to thoroughly oversee the compartment where the fire was stopped till the aircraft is landed.

Declassified in Part - Sanitized Copy Approved for Release 2011/12/14 : CIA-RDP80T00246A064200070001-1

Declassified in Part - Sanitized Copy Approved for Release 2011/12/14 : CIA-RDP80T00246A064200070001-1

5. In case of fire on the aircraft when all the OU-6M fire extinguishers are discharged the neutral gas system button (GS-5) may be used to extinguish the fire. For that purpose press the button located under the guard cap labeled "NEUTRAL GAS FIRE EXTING.", with the corresponding solenoid distribution valve being opened.

6. After the engine fire is extinguished, do not re-start that engine in flight.

7. Any crew member detecting the fire on the aircraft must inform the captain as to the place and source of fire.

If a fire occurs in the cabin all the crew members must put on oxygen masks, breathe only 100% oxygen, shut off the cabin ventilation and start extinguishing the fire with OU portable fire extinguishers.

If the fire started in an electric power consumer, immediately de-energize it.

8. In all events of fire on the aircraft when taking measures to extinguish the fire the captain must inform the traffic control tower about the fire and land the aircraft on the nearest airfield; in case of direct threat to the aircraft and crew safety - the captain must give a command to abandon the aircraft with the parachutes.

XVI. EMERGENCY BAILING-OUT

In emergency the crew abandon the aircraft in flight only by the captain's order. By the captain's command the co-pilot must:

- set the emergency decompression control switch to the "DECOMPRESSION" position;

- cut off the engines air bleed valves and the air-to-cabin supply valve;

- move the escape door sealing valve lever to the "UNSEALED" position;

Declassified in Part - Sanitized Copy Approved for Release 2011/12/14 : CIA-RDP80T00246A064200070001-1

Declassified in Part - Sanitized Copy Approved for Release 2011/12/14 : CIA-RDP80T00246A064200070001-1

set the valve of the emergency escape door opening to the "OPEN"
on, when the differential pressure by the [illegible] indicator
e below 0.29 kg./cm.^{2}

f the emergency escape door did not open, the captain must re-
pening the door by actuating the similar valve on his console.
n opening the emergency escape door the crew members must bail
the following order:

radio operator;

navigator;

flight engineer;

co-pilot;

captain.

The gunner abandons the aircraft by the captain's command.

Before abandoning the aircraft the crew members must:

unfasten the seat belts and get up from the seats;

come to the front edge of the door and stand turning the right
to the direction of flight;

squat and slightly push off so as to slide down on the right
long the door cover with the legs down; when jumping shrink ypur
as possible;

open the parachute, if the KAM-3 time release mechanism
d.

Should the emergency escape door fail to be opened, the crew aban-
e aircraft through the cargo door which must be opened by the
tor.

hen abandoning the aircraft through the cargo door each crew
must:

disconnect the KAM-3 time release mechanism flexible pin lan-
rom the adapters and enter the cargo compartment;

Declassified in Part - Sanitized Copy Approved for Release 2011/12/14 : CIA-RDP80T00246A064200070001-1

Declassified in Part - Sanitized Copy Approved for Release 2011/12/14 : CIA-RDP80T00246A064200070001-1

come at run to the cargo door edge and without stopping jump
h the cargo door;
after leaving the aircraft open the parachute after decrease
ed is felt.

When leaving the aircraft through the entrance door proceed as
:
- disconnect the [illegible] time release mechanism flexible pin
rds from the adapters and enter the cargo compartment;
- open the entrance door;
- jump out of the aircraft with the back down, having pus[illegible]
d off with the left foot against the floor at the door.
- after leaving the aircraft open the parachute after decrease
peed is felt.

NOTE: When bailing out at low altitudes open the parachute
immediately after separating from the aircraft.

Declassified in Part - Sanitized Copy Approved for Release 2011/12/14 : CIA-RDP80T00246A064200070001-1

Declassified in Part - Sanitized Copy Approved for Release 2011/12/14 : CIA-RDP80T00246A064200070001-1

S E C T I O N VII

FLIGHT HYDRAULIC SYSTEM

L.G. EXTENSION AND RETRACTION

A. Retracting L.G. by Right Hydraulic System

1. Unlock and set the L.G. valve control lever to the "UP" tion, then:

a) the L.G. doors closed position warning light goes out;

b) the L.G. extended position green warning lights go out;

c) in 14 to 17 seconds the L.G. is retracted;

d) the L.G. retracted position red warning lights come on;

e) the L.G. doors closed position warning light comes on.

2. Hold the L.G. control lever in the "UP" position for not less 5 seconds, then move it to the neutral position and lock.

B. Extending L.G. by Right Hydraulic System

1. Unlock and set the L.G. valve control lever to the "DOWN" tion, then:

a) the L.G. doors closed position warning light goes out;

b) the L.G. retracted position red warning lights go out;

c) in 12 to 14 seconds the L.G. is extended;

d) the L.G. extended position green warning lights come on;

e) the L.G. doors closed position warning light comes on.

2. Hold the L.G. control lever in the "DOWN" position for not than 5 seconds, then move it to the neutral position and lock.

Declassified in Part - Sanitized Copy Approved for Release 2011/12/14 : CIA-RDP80T00246A064200070001-1

Declassified in Part - Sanitized Copy Approved for Release 2011/12/14 : CIA-RDP80T00246A064200070001-1

NINGS: 1. The flying speed with the L.G. extended must not exceed 350 km./hr.

2. If when setting the L.G. control lever to the neutral position the lever is moved to the other extreme position, then set it in the neutral position, hold there for 3 to 5 seconds, then move it to a position corresponding to the operation that was being performed and on accomplishing the latter, set the lever to the neutral position.

C. Extending L.G. in Case of L.G. Valve Electric Control Failure

In case of L.G. valve remote electric control failure the L.G. e extended by pressing the L.G. control valve button. The valve cated under the floor on the 25 frame web. Check up the L.G. opening, L.G. extension and L.G. doors closing visually through nspection window under the floor at frame 27.

Extend the L.G. as follows:

1. Get through the door into the well between frames Nos.25-27.

2. Press the L.G. control valve button to extend the L.G. and it in this position till the L.G. is fully retracted, then:

a) the L.G. doors open;

b) the L.G. is extended;

c) the L.G. doors close.

Through the inspection door make sure that the L.G. doors are and after holding the button pressed for not less than 5 se- release the L.G. control valve button.

Declassified in Part - Sanitized Copy Approved for Release 2011/12/14 : CIA-RDP80T00246A064200070001-1

Declassified in Part - Sanitized Copy Approved for Release 2011/12/14 : CIA-RDP80T00246A064200070001-1

NOTES: 1. Should the TA-I40 L.G. door control valve electric drive fail, the doors may be closed by pressing the button of the TA-I40 valve. Before pressing the button remove the guard cap from the button. Simultaneously when pressing the TA-I40 valve button hold the L.G. control valve button in the L.G. "DOWN" position in accordance with the para.3 covering the extension procedure till the doors close. After the doors are closed release first the L.G. control valve button and then the TA-I40 valve button.

2. The L.G. extension and the L.G. doors closing, when the valves electric control fails, should be performed by one of the crew members by the captain's command.

3. The L.G. may be extended by means of the right hydraulic system in case of L.G. valve electric control failure only when the door in the floor between frames Nos.25-27 is readily accessible.

D. L.G. Retraction and Extension by Means of Right Hydraulic System when Limit Switch of TA-I40 L.G. Door Control Valve Actuation Interlocking System Fails

In case of failure of TA-I40 door control valve actuation interlocking limit switch in the L.G. control electric circuit, the L.G. can be retracted or extended by de-energizing the TA-I40 L.G. door control valve by means of the switch located on the co-pilot's console. Then the procedure of the L.G. retraction or extension should be as follows:

1. Unlock the TA-I40 L.G. door control valve switch and set it in "R" position.

Declassified in Part - Sanitized Copy Approved for Release 2011/12/14 : CIA-RDP80T00246A064200070001-1

Declassified in Part - Sanitized Copy Approved for Release 2011/12/14 : CIA-RDP80T00246A064200070001-1

Unlock and move the L.G. valve control lever of the right
to retract or extend the L.G., then:
the L.G. doors open;
the L.G. is retracted or extended.
Hold the valve lever in that position for not less than 5 se-

Move the L.G. door control valve switch to "ON" position;
the L.G. doors close.
Set the L.G. valve control lever to the neutral position and

4. L.G. Emergency Extension and Retracti...

a) L.G. Emergency Retraction by Left Pneumatic System

a. Open the L.G. door opening control switch cap.
b. Unlock the control lever of the L.G. extension and L.G. door control valve.
c. Move the L.G. door opening control switch to the "L.G.D.C." position, then:
a) the warning light of the L.G. doors closed position goes out;
b) two to three seconds later the doors open and the L.G. doors open position warning light comes on.
d. Hold the L.G. doors in the opened position for not less than seconds and press the L.G. control valve button to retract the L.G.,

a) the L.G. extended position green warning lights go out;
b) in 14 to 17 seconds the L.G. is retracted;
c) the L.G. retracted position red warning lights come on.
e. Keep the button pressed for not less than five seconds, then release it.

Declassified in Part - Sanitized Copy Approved for Release 2011/12/14 : CIA-RDP80T00246A064200070001-1

Declassified in Part - Sanitized Copy Approved for Release 2011/12/14 : CIA-RDP80T00246A064200070001-1

Move the L.G. doors opening control switch to the neutral posi-

Press the head of the L.G. extension and L.G. doors closing
cy control valve lever, move the lever to the "L.G.DOORS CLOSING"
n, then:

) two to three minutes later the L.G. doors close;

) the door closed position warning lights come on.

. Hold the lever in the operating position for not less than
econds, then move it to the neutral position and lock.

. Put the guard cap on the L.G. emergency retraction control
button and close both the caps.

) L.G. Emergency Extension by Left Hydraulic System

1. Open the L.G. doors opening control switch cap.

2. Unlock the L.G. doors closing and L.G. extension control valve

3. Move the L.G. doors opening control switch to the "DOORS
D" position.

In this case:

a) the L.G. doors closed position warning light goes out;

b) two to three seconds later the doors open, the L.G. doors
d position warning light comes on.

4. Keep the doors open for not less than five seconds.

5. Press the head of the L.G. extension and L.G. doors closing
ency control valve lever and set the lever to the "L.G. EXTENSION"
ion, then:

a) the L.G. retracted position red warning lights go out;

b) 12 to 14 seconds later the L.G. is extended;

c) the L.G. extended position warning lights come on.

Declassified in Part - Sanitized Copy Approved for Release 2011/12/14 : CIA-RDP80T00246A064200070001-1

Declassified in Part - Sanitized Copy Approved for Release 2011/12/14 : CIA-RDP80T00246A064200070001-1

Move the L.G. doors opening control switch to the neutral posi-

Move the valve control lever to the "L.G. DOORS CLOSING" posi-

hen:

two to three seconds later the L.G. doors close;

the L.G. doors closed position w rning light comes on.

Keep the control lever in the operating position for not less

seconds, then move it to the neutral position.

Close the control switch cap and lock the valve control lever.

) L.G. Doors Opening and L.G. Extension by the Left Hydraulic

stem in Case of L.G. Doors Closing Valve Electric Control Failure

n case of the L.G. doors closing valve electric control failure,

G. doors may be opened manually by pressing the button of the

l valve.

o extend the L.G. proceed as follows:

. Unlock the L.G. doors closing and L.G. extension control valve

. Open the cap of the L.G. doors opening and L.G. retraction con-

alve buttons and rsmove the guard cap off the L.G. doors opening

l button.

. Press fully the L.G. doors opening control button and keep it

ed till the L.G. is extended.

. Press the control lever head of the L.G. extension valve con-

witch "L.G.DOORS CLOSING" and move the lever to the "L.G.EXTENSION"

on, then:

a) the red warning lights go out;

b) in 12 to 14 seconds the L.G. is extended;

c) the green lights come on.

Declassified in Part - Sanitized Copy Approved for Release 2011/12/14 : CIA-RDP80T00246A064200070001-1

Declassified in Part - Sanitized Copy Approved for Release 2011/12/14 : CIA-RDP80T00246A064200070001-1

5. Release the L.G. doors opening control valve button.

6. Move the valve control lever to the "L.G. DOORS CLOSING" position, then:

a) two to three seconds later the L.G. doors close;

b) the L.G. doors closed position warning light comes on.

7. Keep the control switch in the operating position for 5 seconds, then move it to the neutral position.

8. Lock the control valve lever, put the guard cap on the valve button and close the cap.

NOTES: 1. Retraction or extension of the L.G. by means of the left hydraulic system is carried out by the radio operator who operates the L.G. doors opening and L.G. retraction control valve (if the valve electric control failed) in accordance with the co-pilot after the captain has given a command.

2. After an emergency L.G. extension or retraction check the fluid contents in the hydraulic reservoir and in case of overfilling of the right reservoir restore a normal level in it by transferring the fluid to the left hydraulic reservoir.

f) L.G. Extension by Hand Pump

1. Set the three-position control valve handle to the "PUMP LEFT HYDRAULIC RESERVOIR" position.

2. Set the multi-position control valve handle to the "L.G. DOORS OPENING" position.

3. Install the pump handle in the operating position.

4. Perform uniform pumping at a speed of about 60 two-way travels per minute, then:

Declassified in Part - Sanitized Copy Approved for Release 2011/12/14 : CIA-RDP80T00246A064200070001-1

Declassified in Part - Sanitized Copy Approved for Release 2011/12/14 : CIA-RDP80T00246A064200070001-1

the L.G. doors closed position warning light goes out;

one to one and a half minutes later the L.G. doors open, the
e registered on the hand pump pressure gauge increases up to
0 kg./cm^2.

Set the multi-position control valve handle to the "NOSE L.G.
position and continue pumping, then:

) the nose L.G. retracted position red warning light goes out;
) one to two minutes later the nose L.G. is extended;
) the pressure indicated by the hand pump pressure gauge in-
s up to 140-150 kg./cm^2.
) the nose L.G. extended position green warning light comes on.

Set the multi-position control valve handle to the "MAIN L.G.
SION" position and continue pumping, then:

a) the main L.G. retracted position red warning lights go out;
b) in three to four minutes the main L.G. is extended;
c) the pressure indicated by the pressure gauge increases up to
50 kg./cm^2.
d) the main L.G. extended position green warning lights come on.

7. Set the multi-position control valve handle to the "L.G.DOORS
NG" position and continue pumping, then:

a) in one to one and a half minutes the L.G. doors close;
b) the pressure indicated by the pressure gauge increases up to
50 kg./cm^2.

8. Set the multi-position control valve handle to the neutral
tion and secure the hand pump handle in its stowage position.

WARNING: 1. When extending the L.G., the handle of the second multi-position valve must be in the neutral position.

2. When extending the L.G. or closing the L.G. doors by operating the hand pump check the fuel contents in the hydraulic reservoirs by the fluid contents gauge as the fluid is transferred from the left hydraulic

Declassified in Part - Sanitized Copy Approved for Release 2011/12/14 : CIA-RDP80T00246A064200070001-1

Declassified in Part - Sanitized Copy Approved for Release 2011/12/14 : CIA-RDP80T00246A064200070001-1

reservoir to the right one, and transfer the fluid by the hand pump from the right hydraulic reservoir to the left one so that the fluid contents in the left reservoir are not less than 12 to 14 litres.

II. 1.6. WHEELS BRAKE SYSTEM

A. Applying the Main Brake System

he main brakes are applied by pressing the brake control pedals.
heck up the main brake system operation by the brake system
e gauge.
he normal pressure in the brake system hydraulic accumulator is
150 kg./cm.^{2}
or a more effective braking and preventing the wheel tyres from
the main brake system is fitted with anti-skid control.
he anti-skid control is actuated by the switch located on the
f the central instrument panel. Two amber lights indicating the
kid control operation are also located there. If the anti-skid
l operates properly the lights should blink, when braking the

The anti-skid control is switched on before taxying the aircraft
d switched off after taxying into the parking area.
o obtain the shortest landing run of the aircraft with the anti-
control on the wheels may be braked by fully pressing the brake
l pedals and keeping them in that position till the aircraft is
d.

Declassified in Part - Sanitized Copy Approved for Release 2011/12/14 : CIA-RDP80T00246A064200070001-1

Declassified in Part - Sanitized Copy Approved for Release 2011/12/14 : CIA-RDP80T00246A064200070001-1

TING: 1. Never apply the wheel brakes before landing.

2. In case of the anti-skid control failure (indicated by the continuous illumination of the warning lights) immediately switch off the anti-skid control switch and continue smoothly applying the brakes.

3. If the brake system hydraulic accumulator is discharged in flight, charge it by operating the hand pump.

charge the hydraulic accumulator by the hand pump proceed as

:

set the three-way valve handle to the "FROM LEFT HYDRAULIC
IR" position;

set the multi-way valve handle to the "BRAKE SYSTEM HYDRAULIC
ATOR CHARGING" position;

install the hand pump handle in the operating position;

uniformly operate the hand pump (about 60 two-way travels per

till the hydraulic accumulator pressure reaches 145-150 kg./cm.^{2}

as soon as a pressure of 147 to 150 kg./cm.^{2} is built up stop

, set the multi-way valve handle to the neutral position and

the pump handle in its usual stowage position.

t is impossible to charge the brake system hydraulic accumulator
required pressure by the hand pump, charge it through the cross-
lve from the right hydraulic system.

do this:

after extending the L.G. and flaps before landing open the
feed valve having preliminarily set the valves handles on the
ump control panel as follows: the three-way valve handle - to
on "FROM LEFT HYDRAULIC RESERVOIR", the multi-way valve handle -

Declassified in Part - Sanitized Copy Approved for Release 2011/12/14 : CIA-RDP80T00246A064200070001-1

Declassified in Part - Sanitized Copy Approved for Release 2011/12/14 : CIA-RDP80T00246A064200070001-1

position "FILLING RIGHT HYDRAULIC RESERVOIR", and operating
pump transfer preliminarily 5 to 6 litres of fluid from the
draulic reservoir to the right one;
during the landing run and taxying see that the fluid contents
left hydraulic reservoir are not more than 26 to 28 litres,
out the excess fluid by the hand pump, and the fluid contents
right hydraulic reservoir are not less than 12 to 14 litres.
the fluid contents in the right hydraulic reservoir are below
ve value close the cross-feed valve and use the emergency brake

B. Emergency Brake System

he emergency brakes are applied separately by means of two
s (L.H. and R.H.), located on the right of the left instrument

heck the emergency brake system by observing the brake system
re gauge reading.
pply emergency brakes in case of failure or malfunctioning of the
hydraulic system.

C. Parking Brake System

heck the parking brake system operation by observing the brake
pressure gauge reading.
apply the parking brake do as follows:
) Uniformly and fully press the brake control pedals.
) Pull out the parking brake button so that it rests against the
(the button is located on the lower control panel).
) Release the pedals.
en releasing the parking brake press the pedals till the button
leased from the stop.

Declassified in Part - Sanitized Copy Approved for Release 2011/12/14 : CIA-RDP80T00246A064200070001-1

Declassified in Part - Sanitized Copy Approved for Release 2011/12/14 : CIA-RDP80T00246A064200070001-1

NG: Before applying the parking brake make sure that the hydraulic accumulator is charged.

OTE: 1. When using the emergency brake system the anti-skid control is inoperative.

2. In case of emergency braking never use the main brake system.

II. NOSE L.G. WHEELS STEERING WHEN TAXYING

e nose L.G. wheels steering is exercised by the steering hand ocated to the right of the captain's lower control panel.

e nose wheels steering is hydraulically operated by the right ic system. The steering hand wheel-to-L.G. wheel ratio is 6:1. els maximum turning angle is ± 35°.

fore steering the nose L.G. wheels fully pull the steering hand ut (this will be accompanied by the amber warning light illumi- indicating that the system is ready for operation). When taxying push the steering hand wheel fully (the warning light goes out).

RNING: 1. Never use the nose L.G. steering control when the aircraft moves at a speed less than 2 km./hr.

2. Never control the nose L.G. wheels by operating the steering hand wheel during a take-off run.

rovided the right hydraulic system has no sufficient pressure se L.G. wheels steering can be exercised from the left hydraulic by means of the cross-feed valve.

o do this:

) After extending the L.G. and flaps before landing, open the feed valve having preliminarily set the valve handles on the hand control panel in the following positions: the three-way valve - to position "FROM RIGHT HYDRAULIC RESERVOIR"; the multi-way

Declassified in Part - Sanitized Copy Approved for Release 2011/12/14 : CIA-RDP80T00246A064200070001-1

Declassified in Part - Sanitized Copy Approved for Release 2011/12/14 : CIA-RDP80T00246A064200070001-1

...le - to position "FILLING LEFT HYDRAULIC RESERVOIR", and ... to 6 litres of fluid by operating the hand pump;

...hen taxying, see that the fluid contents in the right hyd- ...ervoir are not more than 26 to 2[illegible] litres, pumping out the ...ess by the hand pump, and that in the left reservoir - not ... 12 to 14 litres. Should the fluid contents in the left re- ...e below the above value, close the cross-feed valve.

IV. FLAPS CONTROL

...flaps are extended or retracted from both the left and right ... system simultaneously. The flaps take-off setting is 25°, ... landing setting is 35°. The flaps control [illegible] exercised ... the cap[illegible] by means of the selector switch [illegible] ... of the push switch).

... the [illegible] control system pressure by the [illegible] pressure gauges.

... operation of the flaps by the flap [illegible] on the central instrument panel.

... Extending the Flaps

Unlock the flap control switch.

Fully move or press one of the switches to the "EXTEND" posi- ...en:

The flap position indicator pointer smoothly deflects clock-

...en or eight seconds later the flaps are extended through 35°; the valves are automatically switched off.

...ee the control switch in the operating position for not less ... seconds, then move it to the neutral position and lock.

Declassified in Part - Sanitized Copy Approved for Release 2011/12/14 : CIA-RDP80T00246A064200070001-1

Declassified in Part - Sanitized Copy Approved for Release 2011/12/14 : CIA-RDP80T00246A064200070001-1

B. Retracting the Flaps

pact the flaps after taxying out from the runway as follows:
Unlock and fully press or move the control switch to "RETRACT"
n, then:
the flap position indicator pointer smoothly deflects counter-
ge;
seven to eight minutes later the flaps are retracted;
the valves are automatically switched off.
Keep the control switch in this position for not less than 5
s, move the switch to the neutral position and lock it.
RNING: Retract or extend the flaps through an angle of 35° at the indicated airspeed of not more than 300 km./hr. and through an angle of 25° at the indicated airspeed of not more than 340 km./hr.

C. Extending the Flaps by Hand Pump

During flight there is no pressure in the left and right hydrau-
stems the flaps can be extended, if necessary, by the hand pump
lows:
Set the three-way valve handle to the "FROM LEFT HYDRAULIC RE-
" position;
Set the multi-way valve handle to the "FLAPS EXTENSION" position;
Install the hand pump handle in the operating position.
Pump uniformly to perform 60 two-way travels per minute and watch
ap position indicator pointer.
As soos as the flaps are deflected through a required angle, stop
, set the multi-way valve handle to the neutral position, secure
nd pump handle in the stowage position.
NING: Extend the flaps by the hand pump through not more than 35°.

Declassified in Part - Sanitized Copy Approved for Release 2011/12/14 : CIA-RDP80T00246A064200070001-1

Declassified in Part - Sanitized Copy Approved for Release 2011/12/14 : CIA-RDP80T00246A064200070001-1

V. EMERGENCY ESCAPE DOOR CONTROL

mergency escape door valve control switches are located on the
s console (right system control) and on the captain's console
tem control).
k up the pressure by the brake system pressure gauge (left sys-
by the right hydraulic system pressure gauge.

A. Opening the Emergency Escape Door from Right or Left Hydraulic System

Decompres the cabin and the door inflatable sealing tube.
Unlock the lever, press the head of the door control valve
nd move it to the "OPEN" position, then:
) the escape door opens and will be secured by stays;
) three to four seconds later the escape door opens;
) keep the escape door in the open position as long as required,
moving the escape door control valve lever to the neutral posi-

B. Closing the Emergency Escape Door from Right or Left Hydraulic System

Press the head of the escape door control lever and move the
through the neutral position to the "CLOSED" position, then:
a) in three to four seconds the escape door closes;
b) the pressure increases up to 140-150 kg./cm.²
Press the head of the escape door control lever, move the lever
neutral position and lock it.
Release the upper door locks, close the doors and lock them
CAUTION: Observing the indications of the mechanical and electrical
warning system check that the escape doors is properly
closed and locked.

Declassified in Part - Sanitized Copy Approved for Release 2011/12/14 : CIA-RDP80T00246A064200070001-1

Declassified in Part - Sanitized Copy Approved for Release 2011/12/14 : CIA-RDP80T00246A064200070001-1

C. Emergency Escape Door Control from Hand Pump

ase of insufficient pressure in the right and left hydraulic
the emergency escape door can be opened or closed from the
p system.
ck up the door opening or closing by the hand pump system
gauge, by the warning light illumination or visually.

Opening the Emergency Escape Door

en the emergency escape door as follows:
et the three-way control valve handle to the "FROM LEFT HYD-
RESERVOIR" position,
et the multi-way control valve handle to the "TO LEFT SYSTEM"
on;
nlock the captain's emergency escape door control lever, press
d of the lever and move it to the "OPEN" position;
nstall the pump handle in the operating position and make
60 two-way travels per minute, then:
) the upper segments of the escape door open and will be se-
by the open position locks;
) the escape door closed position warning light goes out;
) in two to three minutes the escape door opens.

. Closing the Emergency Escape Door

o close the emergency escape door proceed as follows:
Press and set the emergency escape door control lever to the
D" position, and continue pumping, then:
) in two to three minutes the escape door closes;
) the escape door opened position warning light comes on.

Declassified in Part - Sanitized Copy Approved for Release 2011/12/14 : CIA-RDP80T00246A064200070001-1

Declassified in Part - Sanitized Copy Approved for Release 2011/12/14 : CIA-RDP80T00246A064200070001-1

the escape door control lever to the neutral position and

the multi-way valve control handle to the neutral position;
ure the hand pump handle in the stowage position.

VI. BOMB BAYS DOORS CONTROL

bomb bays doors control panel is located in the navigator's
the starboard.
ck up the bomb bays doors opening and closing by the warning
illumination.

. Opening the Bomb Doors from Right Hydraulic System

Open the cover of the bomb doors opening and closing warning
trol panel.
Press the bomb doors control switch to the "OPEN" position,

he bomb doors closed position red warning light goes out
n 1.5 to 2 seconds the bomb doors open.
he bomb doors opened position green warning light comes on.
Keep the control switch pressed for 3 to 5 seconds, then
it.

B. Closing the Bomb Doors from Right Hydraulic System

Press the bomb doors control switch to the "CLOSE" position,

he bomb doors opened position green warning light goes out
n 1.5 to 2 seconds the bomb doors close;
he bomb doors closed position red warning light comes on.
Keep the bomb doors control switch pressed for 3 to 5 seconds,
lease it.
Close the bomb doors control panel by the cover.

Declassified in Part - Sanitized Copy Approved for Release 2011/12/14 : CIA-RDP80T00246A064200070001-1

Declassified in Part - Sanitized Copy Approved for Release 2011/12/14 : CIA-RDP80T00246A064200070001-1

ening the Bomb Doors in Emergency from Left Hydraulic System

pen the cover of the bomb doors position warning and control

he ЗС-9 circuit breakers of the bomb doors emergency control
n "ON" position, in this case the bomb doors closed position
ng light comes on.
ise the guard cap of the control valve switch and move the
o the "OPEN" position, then:
he bomb doors closed position red warning light goes out;
in 1.5 to 2 seconds the bomb doors open;
the bomb doors opened position green warning light comes on.
Keep the switch in that position for 3 to 6 seconds, then
to the neutral position.

Closing the Bomb Doors in Emergency from Left Hydraulic System

Set the bomb doors control valve switch to the "CLOSE" position,

the bomb doors opened position green warning lights go out;
1.5 to 2 seconds later the bomb doors close;
the bomb doors closed position red warning light comes on;
Keep the bomb doors control valve switch in that position for
seconds, then move it to the neutral position.
Close the control panel cover.

Opening and Closing the Bomb Doors from Hand Pump

hen the pressure in the hydraulic system is insufficient, the
ors can be opened from the hand pump system.
eck up the doors opening and closing by the hand pump pressure
nd by the illumination of the warning lights on the right hyd-
system control panel with the bomb doors control circuit

Declassified in Part - Sanitized Copy Approved for Release 2011/12/14 : CIA-RDP80T00246A064200070001-1

Declassified in Part - Sanitized Copy Approved for Release 2011/12/14 : CIA-RDP80T00246A064200070001-1

switched on.

1. The Bomb Doors Opening

open the bomb doors, do as follows:

Set the three-way control valve handle to the "FROM LEFT HYD-
RESERVOIR" position;

Set the multi-way control valve handle to the "TO LEFT HYDRAULIC
" position.

Install the hand pump handle in the operating position.

Open the cover of the bomb door position warning and control

Switch on the AJC-5 circuit breaker of the bomb doors emergency
1; the bomb doors closed position red light becomes illuminated.

Pump uniformly to make 60 two-way travels per minute, then:

the bomb doors closed position red warning light on the
ncy control panel goes out:

) in 1.5 to 2min. the bomb doors open;
) the pressure in the system increases up to 150 kg./cm.^{2};
) the comb doors opened position green warning light comes on.

2. Closing the Bomb Doors

o close the bomb doors, do as follows:

Move the bomb doors emergency control switch to the "CLOSE"
on;

Pump uniformly to make 60 two-way travels per minute, checking
hand pump operation by the pressure gauge, then:

) in 2 to 3 minutes the bomb doors close;

) the pressure registered on the pressure gauge increases up
kg./cm.^{2};

) the bomb bays doors closed position red warning light on the
ncy control panel comes on.

Declassified in Part - Sanitized Copy Approved for Release 2011/12/14 : CIA-RDP80T00246A064200070001-1

Declassified in Part - Sanitized Copy Approved for Release 2011/12/14 : CIA-RDP80T00246A064200070001-1

operating the hand pump.

the bomb doors emergency control switch to the neutral posi-

VII. CARGO DOORS CONTROL

rgo Doors Control from Right Hydraulic System

argo door control valve switch is located on the control panel vigator's cabin on the port side.

A3C-5 cargo doors control circuit breaker is located on the t's right panel.

k up the cargo door opening and closing by the warning lights tion.

1. Opening the Cargo Door

en the cover of the right control panel.

itch on the A3C-5 cargo door control circuit breaker, in this cargo door closed position red warning light comes on.

ove the control valve switch to the "OPEN" position, then:

the cargo door closed position red warning light goes out;

in 12 to 14 seconds the cargo doors open;

the cargo door opened position green warning light comes on.

keep the cargo doors control switch in that position for 3 to s, then move it to the neutral position.

2. Closing the Cargo Door

ove the valve control switch to the "CLOSE" position, then:

the cargo door opened position warning light goes out;

12 to 14 seconds later the cargo door closed;

the cargo door closed position red warning light comes on;

es the valve control switch in that position for 3 to 5 seconds, n it to the neutral position.

Declassified in Part - Sanitized Copy Approved for Release 2011/12/14 : CIA-RDP80T00246A064200070001-1

Declassified in Part - Sanitized Copy Approved for Release 2011/12/14 : CIA-RDP80T00246A064200070001-1

. Cargo Doors Emergency Control from Left Hydraulic System

he cargo door emergency control valve switch is located near
go door control switch used when controlling the doors from the
ydraulic system.

1. Opening the Cargo Door

o open the cargo door from the left hydraulic System do as
s:

1. Open the right control panel cover.
2. The A30-5 cargo door control circuit breaker must be switched
h the cargo door closed position red warning light illuminated.
3. Unlock and move the cargo door control valve switch to the
position, then:
a) the cargo door closed position red warning light goes out;
b) in 12 to 14 seconds the cargo doors open;
c) the cargo door opened position green warning light comes on.
4. Keep the cargo door control switch in that position for 3 to
onds, then move it to the neutral position.

2. Closing the Cargo Door

Move the cargo door control valve switch to the"CLOSE"
on, then:

a) the cargo doors opened position green warning lifht goes

b) in 12 to 14 seconds the cargo doors close;

c) the cargo door closed position red warning light comes on.

Keep the switch in that position for 3 to 5 seconds, then
move it to the neutral position and lock it.

Declassified in Part - Sanitized Copy Approved for Release 2011/12/14 : CIA-RDP80T00246A064200070001-1

Declassified in Part - Sanitized Copy Approved for Release 2011/12/14 : CIA-RDP80T00246A064200070001-1

LNG: 1. If, after closing the cargo doors, when setting the control valve switch to the neutral position, the switch is accidentally moved to the opened position, set the switch to the neutral position, keep it there for 3-5 seconds, then move it to the closed position. When the cargo doors close set the valve control switch to the neutral position.

The similar procedure should be performed when opening the cargo doors.

: The cargo doors can be also controlled by the switch installed on the control panel in the cargo compartment on the starboard at frame No. 30. In this case check the cargo doors position visually.

C. Cargo Doors Control from Hand Pump.

n the right and left hydraulic systems fail the cargo doors may ened or closed by means of the hand pump system.

cargo doors opening or closing is exercised from the hand pump l panel.

the doors opening or closing by the hand pump control panel re gauge visually and, with the A30-5 circuit breakers switched the illumination of the warning lights on the cargo door main ergency control panel.

1. Opening the Cargo Doors

pen the cargo doors, do as follows:

et the three-way valve handle to the "FROM LEFT HYDRAULIC RE- VOIR" position;

Declassified in Part - Sanitized Copy Approved for Release 2011/12/14 : CIA-RDP80T00246A064200070001-1

Declassified in Part - Sanitized Copy Approved for Release 2011/12/14 : CIA-RDP80T00246A064200070001-1

et the multi-way valve handle to the "OPEN" position.
stall the hand pump handle in the operating position.
pen the right control panel cover.
witch on the A3-5 cargo door control circuit breaker (the
ht must become illuminated).
ump uniformly to make 60 two-way travels per minute watching
essure gage reading, then:
the cargo doors closed position red warning light goes out;
in 3 to minutes the cargo doors open;
the pressure increases up to 150 kg./cm.^{2}
the cargo door opened position green warning light comes on.
stop operating the hand pump.

2. Closing the Cargo Doors

ove the multi-way valve handle to the cargo door "CLOSE"
n.
pen the right control panel cover.
witch on the A3-5 cargo door control circuit breaker.
ump uniformly to make about 60 two-way travels per minute, then:
the cargo door opened position green warning light goes out;
3 to 4 minutes later the cargo doors close;
the pressure in the system increases up to 150 kg./cm.^{2}
the cargo door closed position red warning light comes on.
top operating the hand pump and set the multi-way valve
to the neutral position.

. FUEL SUPPLY SWITCHING OVER TO HAND PUMP SUPPLY SYSTEM

ould the hydraulic fluid in the right and left hydraulic sys-
lost, switch over the fuel supply to the hand pump supply

Declassified in Part - Sanitized Copy Approved for Release 2011/12/14 : CIA-RDP80T00246A064200070001-1

Declassified in Part - Sanitized Copy Approved for Release 2011/12/14 : CIA-RDP80T00246A064200070001-1

control switch to change over fuel supply to the hand pump
stem is located on the left side of the central instrument

ding procedure:

nlock the fuel-to-hand pump system supply valve control switch.
et the three-way valve handle on the hand pump control panel
FROM LEFT HYDRAULIC RESERVOIR" position.
ove the fuel-to-hand pump system supply valve control switch
extreme position.
erform the required operation in sequence specified in the
structions to open or close the doors, to extend the L.G.
the flaps, to recharge the hydraulic accumulators.

IX. GUNNER'S CABIN EMERGENCY ESCAPE DOOR CONTROL

emergency escape door control is exercised from the right hyd-
stem.

emergency escape door control panel is located in the gunner'
starboard.

escape door main control is performed by means of the valve
witch. Check up the emergency escape door opening or closing
ond by the warning light.

Opening the Emergency Escape Door

circuit breaker of the gunner's cabin emergency
control must be switched on.
lock the valve control switch and set it to the "OPENED"

gunner's cabin emergency escape door mechanical lock opens.
to five minutes later the emergency escape door opens.
ng the switch in that position for 3 to 5 seconds move it
tral position.

Declassified in Part - Sanitized Copy Approved for Release 2011/12/14 : CIA-RDP80T00246A064200070001-1

Declassified in Part - Sanitized Copy Approved for Release 2011/12/14 : CIA-RDP80T00246A064200070001-1

B. Closing the Emergency Escape Door

Move the valve control switch to the "CLOSED" position: in [illegible] five minutes the emergency escape door closes.

Open the gunner's cabin emergency escape door control valve [illegible] in what position for three to five seconds, then move it to the [illegible] position and lock.

[illegible] Gunner's Cabin Escape Door Emergency Control

[illegible] the gunner's cabin escape door in emergency by means of [illegible] pneumatic system.

The emergency control valve of the escape door is located on the control panel of the gunner's cabin.

To open the escape door using the emergency control system [illegible] as follows:

Unlock the valve.

Rotate the valve hand wheel counterclockwise till the escape [illegible] opens.

NOTE: The emergency escape door is opened or closed by the gunner on the captain's order.

Declassified in Part - Sanitized Copy Approved for Release 2011/12/14 : CIA-RDP80T00246A064200070001-1

Declassified in Part - Sanitized Copy Approved for Release 2011/12/14 : CIA-RDP80T00246A064200070001-1

S E C T I O N VIII

NOSE WHEEL STEERING SYSTEM OPERATED BY RUDDER PEDALS

The aircraft is equipped with a nose wheel steering system operated by rudder pedals at take-off or landing.

With the rudder deflected through full angle (full travel of the pedals) the nose wheels are turned through an angle of 10^{+2}_{-1} deg. to either side from the neutral position.

The system maintains a certain direction of the aircraft movement during the take-off run and landing run, particularly at high cross wind and asymmetrical thrust (when the propeller flight fine-pitch stop is released or in case of landing with two engines out).

A. NOSE-WHEEL STEERING AT TAKE-OFF

Having taxied into the take-off position the aircraft captain should do as follows:

1. Switch OFF the nose wheel taxy steering system, for which purpose push the steering wheel full way forward; in this case the "NOSE WHEEL TAXY STEERING" yellow light should go off.

2. Switch ON the nose wheel take-off-and-landing steering system operating the switch installed under the instrument panel; in this case the "Ready" and "ON" green lights should become illuminated.

3. Holding the aircraft with the brakes, run the engine at one-hour r.p.m. corresponding to 25-35 deg. indicated by the VHPT-2 fuel control lever position indicator. Having made certain that the engine is running at operating r.p.m. and the indications of the engine instruments are correct, increase the speed of the outboard engines up to the take-off final rating. Check the outboard engines for synchronous running. Increase the speed of the inboard engines up to the take-off rating.

Declassified in Part - Sanitized Copy Approved for Release 2011/12/14 : CIA-RDP80T00246A064200070001-1

Declassified in Part - Sanitized Copy Approved for Release 2011/12/14 : CIA-RDP80T00246A064200070001-1

e aircraft moves off from rest.

en release the brakes simultaneously, begin the take-off run
g the required direction by rudder pedal movement and hold-
rcraft from banking caused by cross wind by means of the ai-

ippery ground increase the speed of the outboard engines
ly till the aircraft moves off from rest, increase the in-
ines speed at the beginning of the take-off run, obtain the
rating of the outboard engines after the take-off run direc-
ready.

en the nose wheels clear the ground, the nose wheel take-off-
ng steering system is switched off automatically, the "ON"
t goes out.

the landing gear and flaps are retracted switch off the
take-off-and-landing steering system; in this case the
F" light will go out.

NG: If after take-off the "ON" light is illuminated, switch off the nose wheel take-off-and-landing steering system immediately after the aircraft clears the ground. At landing the nose wheel take-off-and landing steering system may be turned on only after the nose wheel touch down.

B. NOSE WHEEL STEERING AT LANDING

en approaching for landing, the captain or the flight engineer
mand should turn on the nose wheel take-off-and-landing
ystem after extending the landing gear. Check that the system
hstering the "READY" green light (the light should be illumi-

Declassified in Part - Sanitized Copy Approved for Release 2011/12/14 : CIA-RDP80T00246A064200070001-1

Declassified in Part - Sanitized Copy Approved for Release 2011/12/14 : CIA-RDP80T00246A064200070001-1

2. After touching down, at the beginning of the landing run the [illegible] steering system is switched on automatically. In this case the "ON" green light will light up.

[illegible] the nose wheel steering operated by the rudder pedals during [illegible] run considerably facilitates holding the aircraft in the [illegible] line direction in case of engine failure, high cross wind or when the landing runway is covered with ice and snow.

3. When taxying to the parking place, turn off the nose wheel take-off and landing steering switch; in this case the "READY" and "ON" [illegible] lights will go out. Switch on the nose wheel taxy steering system [illegible] fully pulling the steering wheel; then the yellow light will go [illegible] taxying to the parking place the nose wheel is controlled [illegible] by means of the steering wheel.

S E C T I O N IX

F U E L S Y S T E M

[illegible] aircraft has 22 bag-type fuel tanks forming 12 groups (six [illegible] each half-wing).

[illegible] consumption from the tank groups is controlled manually or [illegible]ally.

[illegible] automatic fuel consumption control of the L.H. wing is dupli[illegible] that of the R.H. wing, and vice versa.

[illegible] fuel tank groups of the L.H. and R.H. half-wings are inter[illegible] by the cross-feed pipeline which permits the fuel to be sup[illegible] any group of the tanks for all the four engines.

I. CHECKING THE CSTC-260B FUEL CONTENTS GAUGE SYSTEM PRIOR TO FLIGHT

CHECKING THE MEASURING CIRCUIT.

[illegible]eck the measuring circuit do as follows:

Declassified in Part - Sanitized Copy Approved for Release 2011/12/14 : CIA-RDP80T00246A064200070001-1

Declassified in Part - Sanitized Copy Approved for Release 2011/12/14 : CIA-RDP80T00246A064200070001-1

set the fuel contents gauge selector switch to the position for ... group (group (I,II,III,IV,V,VI) or for the total fuel quantity measurements (TOTAL);

Switch on the ПО-750 A.C. inverter;

Set the switches of the fuel contents gauge and automatic fuel consumption control units to the "ON" position.

After two-minute warming up push the button on the indicator (the lower part of the indicator scale); in this case the pointer begins to move and then rests against the "ZERO" mark of the scale. With the button released the pointer should rest against the scale mark indicating the fuel contents;

Compare the fuel contents gauge readings with the actual quantity of fuel in the tanks;

Set the reading on the total fuel flow counter of each flowmeter corresponding to 1/4 quantity of fuel in tanks.

2. CHECKING THE MANUAL FUEL CONSUMPTION CONTROL SYSTEM

Set the "AUTOMATIC-MANUAL" switch to the "MANUAL" position;

Turn on the manual fuel consumption control switches in due ... in this case the green lights corresponding to the switched ... should become illuminated;

Set the switches of the sixth group auxiliary booster pumps ... ON" position; the four green lights should go on;

Open the shut-off valves; then the pressure, as indicated by ... ДМ-3 pressure gauges on the instrument panel, should be 0.5 ... kg./cm. depending on the rating at which the booster pumps are ...g;

Close the shut-off valves.

Declassified in Part - Sanitized Copy Approved for Release 2011/12/14 : CIA-RDP80T00246A064200070001-1

Declassified in Part - Sanitized Copy Approved for Release 2011/12/14 : CIA-RDP80T00246A064200070001-1

3. CHECKING THE AUTOMATIC FUEL CONSUMPTION CONTROL SYSTEM

When checking the СЗТС-260В fuel contents gauge system automatic control, proceed as follows:

a) set the "AUTOMATIC-MANUAL" switch to the "AUTOMATIC" position;

b) set the automatic fuel consumption control switches to the "OPEN" position;

c) turn on the switches of the auxiliary sixth groups;

d) when the automatic system operates normally, the following lights must be on:

blue lights beginning from the 1-st group to the group from which the fuel is being supplied;

green lights of the booster pumps of the groups from which the fuel is being supplied;

lights of the auxiliary tank groups booster pumps.

NOTE: When fuelling the aircraft, do not miss any tank group. Fill the tanks in sequence reverse to the consumption sequence.

e) to check operation of the automatic control system of one half-wing disconnect the automatic control system of the other half-wing. In this case, at even fuel consumption there should be no simultaneous indication of the warning lights on the fuel consumption control panel mounted on the centre instrument panel.

f) check the automatic control system of the other half-wing for operation in a similar manner.

NOTE: Operation of the automatic fuel control system may be checked completely only on the ground when draining fuel.

Declassified in Part - Sanitized Copy Approved for Release 2011/12/14 : CIA-RDP80T00246A064200070001-1

Declassified in Part - Sanitized Copy Approved for Release 2011/12/14 : CIA-RDP80T00246A064200070001-1

II. FUEL CONSUMPTION CONTROL IN FLIGHT

1. AUTOMATIC CONTROL

the following switches:

the "AUTOMATIC-MANUAL" switch to the "AUTOMATIC" (up) position.

the auxiliary tank groups switches ON (up position);

the automatic fuel consumption control switches ON (up position);

the fuel contents gauge switches ON (up position).

Open the shut-off valves by pushing the toggle switches up, the green lights being on.

1. At normal operation of the automatic system the green lights of the operating and auxiliary (Nr.) groups are illuminated as well as the blue lights of the groups from which fuel is being consumed or has been consumed.
2. In case of automatic fuel consumption control system failure, use the manual control system.

2. MANUAL CONTROL

Move the "AUTOMATIC-MANUAL" switch down to the "MANUAL" posi-

Switch ON the booster pumps of the group indicated by the last ed blue light according to the fuel consumption sequence.

Then the blue light of the next group lights up, turn on the ontrol switch of this group.

: At manual control the warning light system will operate in the same manner as at automatic control.

Declassified in Part - Sanitized Copy Approved for Release 2011/12/14 : CIA-RDP80T00246A064200070001-1

Declassified in Part - Sanitized Copy Approved for Release 2011/12/14 : CIA-RDP80T00246A064200070001-1

3. WARNING LIGHT SYSTEM

[illegible] power supply on, automatic control system operating normally [illegible] adequate quantity of fuel in the tanks, the blue indicator lights [illegible] pilots' instrument panel become illuminated in the following [illegible]:

[illegible] when the fuel tanks are filled up to capacity, the "1-st GROUP [illegible] light is illuminated.

[illegible] after the fuel of the 1-st tank group has been consumed down [illegible] 0-litre reserve, the "2-nd GROUP ON" blue light of the R.H. [illegible] half-wings becomes illuminated.

[illegible] after the fuel of the 2-nd tank group has been consumed down [illegible] 0-litre reserve, the "3-rd GROUP ON" blue light of the R.H. [illegible] half-wings becomes illuminated.

[illegible] after the fuel of the 3-rd tank group has been consumed down [illegible] 0-litre reserve, the "4-th GROUP ON" blue light of the R.H. [illegible] half-wings becomes illuminated.

[illegible] after the fuel of the 4-th tank group has been consumed down [illegible] 0-litre reserve, the "5-th GROUP ON" blue light of the right [illegible] half-wings becomes illuminated.

[illegible] after the fuel of the first four tank groups and the fifth [illegible] consumed up to 340-litre reserve, the "60- MIN. RESERVE" [illegible] ht becomes illuminated.

[illegible] when there remains 280 litres of fuel in the 6-th tank group, [illegible] N.RESERVE" red light becomes illuminated irrespective of a [illegible] ity in the preceeding groups.

[illegible] The blue lights that are illuminated do not go out, [illegible] with stopping of the pumps of the groups from which the [illegible] fuel has been consumed.

[illegible] se-sense of the indicator light appearance will indicate a [illegible] of the automatic fuel control system.

Declassified in Part - Sanitized Copy Approved for Release 2011/12/14 : CIA-RDP80T00246A064200070001-1

Declassified in Part - Sanitized Copy Approved for Release 2011/12/14 : CIA-RDP80T00246A064200070001-1

4. MEASURING THE FUEL QUANTITY

ntity of fuel in the aircraft tanks is determined by setting contents gauge selector switch knob to the respective posi- this case, each pointer of the fuel contents gauge indicator ow the quantity of fuel in the respective tanks of the L.H. half-wings.

ion of the fuel contents gauge selector knob	Tank No.
	1,2
	3
I	5,6
V	7,8
	9,10,11
I	4

5. AFTER FLIGHT

Close the shut-off valves by pushing the toggle switches down ed lights are on.

Set the switches of the automatic units, fuel contents gauge liary tank groups to the "OFF" position.

Set the "AUTOMATIC-MANUAL" switch to the "MANUAL" position.

Switch off all the circuit breakers of the fuel system.

S E C T I O N X

FIRE-EXTINGUISHING SYSTEM

fire-extinguishing system is designed to put out a fire on nes, in the wing fuel tank compartments, crew and attendants' cargo compartment and gunner's cabin.

Declassified in Part - Sanitized Copy Approved for Release 2011/12/14 : CIA-RDP80T00246A064200070001-1

Declassified in Part - Sanitized Copy Approved for Release 2011/12/14 : CIA-RDP80T00246A064200070001-1

[illegible] comprises six OC-8M fire extinguishers charged with [illegible]guishant, pipes, eight distribution solenoid valves(2 units) [illegible]llectors, ССП-2А fire warning system , four bottles [illegible] of the neutral gas system filled with liquid carbon [illegible] five "ОУ" portable fire extinguishers.

[illegible]-8M fire extinguishers and ОСУ-5 bottles located under [illegible] on the web of frame No27 and the "ОУ" portable fire [illegible]ers are located; one of them in the crew's cabin (on fr. No8) [illegible] attendant's cabin, (on frame No 9), two fire extinguishers [illegible]go compartment (on the fuselage port wall aft of the entrance do[illegible] and one fire extinguisher - in the gunner's cabin.

[illegible] distributing solenoid valves units are located behind the centre [illegible] spar, under the fillet.

[illegible] fire warning and fire extinguishing system control panel is [illegible] the left part of the centre instrument panel.

[illegible] CHECKING the FIRE EXTINGUISHING SYSTEM on the GROUND PRIOR to FLIGHT

[illegible] the fire extinguishing system master switch on the instrument [illegible] the "CHECK" position.

[illegible]ch on the " FIRE EXTING. SYSTEM" circuit breakers on the cir[illegible]akers panel located on frame No 9. With the system operative, [illegible]amber lights should become illuminated indicating that the [illegible] fire extinguishers have pyrocartridges and are ready for ope[illegible] the red "lights-buttons" should remain off. If the red [illegible]uttons" light up, stop further check, find and eliminate [illegible]unction.

In due succession press the "lights-buttons" of all the fire [illegible] When the system is operative, the red "lights-buttons" are on [illegible]ld remain on after the button is released which will indi[illegible]ning of the distributing valves.

Declassified in Part - Sanitized Copy Approved for Release 2011/12/14 : CIA-RDP80T00246A064200070001-1

Declassified in Part - Sanitized Copy Approved for Release 2011/12/14 : CIA-RDP80T00246A064200070001-1

Set the fire extinguishing system master switch to the "OFF"
, in this case the red "lights-buttons" and amber check lights
Then set the master switch to the "CHECK" position; then
er check lights of all the fire extinguishers should light up.
"lights-buttons" should remain off.

Check the CCT-2A fire warning system for condition; the red
s-buttons" go on when by pushing the check selector switches
ed on the panel aft of the pilot's seat.

When one of the selector switches is pushed momentarily up or
the red "light-button" of the fire zone corresponding to this
will light up. After the switch is released the red "light-
n" remains lighted.

Set the fire extinguishing system master switch to the "OFF"
on; then the red "light-button" will go off.

Check in due succession all the fire detector groups of the
arning system of each fire zone in accordance with steps 6 and
this paragraph.

Check the OC-8M fire extinguishers for proper charging by
tions of the pressure gauges.

Before starting the engines make the system ready for opera-
by setting the master switch to the "FIRE EXTINGUISHING" position.

NOTE: Lighting up of any of the red "lights-buttons" after the fire extinguishing system was de-energized for a short period of time when checked will indicate that the fire extinguishing system is faulty.

To remedy the defect in the fire extinguishing system do not set the master switch to the "FIRE EXTINGUISHING" position to avoid automatic actuation of the first-group fire extinguishers.

Declassified in Part - Sanitized Copy Approved for Release 2011/12/14 : CIA-RDP80T00246A064200070001-1

Declassified in Part - Sanitized Copy Approved for Release 2011/12/14 : CIA-RDP80T00246A064200070001-1

NG: When the master switch is in the "FIRE EXTINGUISHING" position and the circuit breakers of the fire extinguishing system are on, do not press the "lights--buttons" to avoid automatic actuation of the first-group OC-8M fire extinguishers.

B. CHECKING THE SYSTEM IN FLIGHT

ire extinguishing system is ready for operation when:
circuit breakers on the fire extinguishing system control in the "ON" position;
master switch of the fire extinguishing system is in the INGUISHING" position, the amber lights are on indicating that rtridges are in place and the OC-8M fire extinguishers are operation.

For fire extinguishing system control instructions in case of fire on aircraft refer to the section "Abnormal and emergency operation".

Declassified in Part - Sanitized Copy Approved for Release 2011/12/14 : CIA-RDP80T00246A064200070001-1

Declassified in Part - Sanitized Copy Approved for Release 2011/12/14 : CIA-RDP80T00246A064200070001-1

S E C T I O N XI

АП-28Д AUTOPILOT OPERATION

I. CHECKING THE АП-28Д AUTOPILOT BEFORE FLIGHT

Before starting the engines the pilot must:

make certain the "POWER" switch on the control panel is in the "OFF" position;

set the "TRANSFER CONTROL" switch on the control panel to the "PILOT" position;

make certain the autopilot servo units switch on the pilot's instrument panel is in the "OFF" position;

switch on the circuit breakers and switches required for operating the autopilot and "ГИК-I" gyro flux-gate compass;

release the flying controls locks and check the flying controls for travel moving them from one extreme position to the other.

Before starting the engines the navigator should be certain that navigator's autopilot turn control knob is in the neutral position.

After starting the engines the pilot must:

turn on the "POWER" switch on the control panel; 1-3 minutes later the "READY" amber light on the control panel should become illuminated. Turn on the autopilot servo units switch;

press and release after synchronizing the ГИК-I gyro flux-gate synchronizing button;

check the master vertical gyro for correct erection by observing the A.V.G. indicator on the control panel. by pressing the "Pitch" button. Before and after pressing the "PITCH" button on the control panel the indicator pointer should be near the zero mark. In this case the

Declassified in Part - Sanitized Copy Approved for Release 2011/12/14 : CIA-RDP80T00246A064200070001-1

Declassified in Part - Sanitized Copy Approved for Release 2011/12/14 : CIA-RDP80T00246A064200070001-1

...reen light on the control panel should be on.

...ruptly move the flying controls in due succession through a ...el. In this case the "READY" amber light on the control panel ...off; after the flying controls have stopped moving the light ...come illuminated.

...the pedals to the neutral or near the neutral position.

... When the pedals and control wheel are moved through more than 2/3 of their travel the "READY" amber light on the control panel may remain off.

...ush the autopilot "ON" button located on the autopilot control ... this done, the "READY" amber light on the control panel ...o off and the "ON" green light must become illuminated. ...this case the pedals may be deflected from the neutral position, ...e control wheel and column should remain in place.

...ying a force to the flying controls, make certain the servo ... on (the servo units hinder the flying controls movement).

...press the "ALT.CORR." button on the autopilot control panel, ... the "ALT.CORR." green light should become illuminated.

...ove the autopilot control hand grip for right and left bank, ... dive in succession. The movements of the autopilot control ... should result in respective deflections of the aircraft fly... ...rols. When the autopilot control hand grip is moved for bank, ...ls should obtain a position near to neutral.

...e the aircraft flying controls deflected for bank and pitch.

...ress the "RETURN TO LEVEL FLIGHT" button, in this case the ...heel pedals and control column should return to a position ... trim; the "ALT.CORR." green light on the control panel ...come illuminated.

...s the autopilot "ON" button located on the autopilot control

Declassified in Part - Sanitized Copy Approved for Release 2011/12/14 : CIA-RDP80T00246A064200070001-1

Declassified in Part - Sanitized Copy Approved for Release 2011/12/14 : CIA-RDP80T00246A064200070001-1

[illegible] the autopilot control to the navigator by setting the "CONTROL TRANSFER" switch on the control panel to the "NAVIGATOR" position ; then the "NAVIGATOR" amber light and "CONTROL TRANSFERRED" light on the navigator's L.H. panel should become illuminated.

NOTE: 1. When performing a check according to step "g" after the autopilot control hand grip is moved for climb or dive, the "ALT. CORR." light should go off.

2. During the check according to steps "g" and "h" the "ALT. CORR." light may go off when the autopilot "ON" button is pressed or control is transferred to the navigator when returning to level flight.

4. After control has been transferred from pilot to navigator, the navigator must do as follows:

a) [illegible] the turn control knob for right bank and then for left bank. In this case the aircraft control wheel should move towards right and left respectively. Leave the control wheel in the deflected position.

b) [illegible] the "RETURN TO LEVEL FLIGHT" button. This done, the control wheel should return to a position near to neutral. Set the turn control knob to the position.

5. After control is transferred from navigator to pilot the pilot must do as follows:

a) [illegible] the "CONTROL TRANSFER" selector switch on the control to the "PILOT" position. The amber light on the control panel labelled "NAVIGATOR" should go off.

b) Check that the autopilot control can be overridden by the force of the pilot. For this purpose apply an effort to the control column, control wheel, pedals in the succession to override the autopilot servo units. The autopilot servo units should be overridden by the force of the pilot.

c) Press the autopilot disengage button thereby the control

Declassified in Part - Sanitized Copy Approved for Release 2011/12/14 : CIA-RDP80T00246A064200070001-1

Declassified in Part - Sanitized Copy Approved for Release 2011/12/14 : CIA-RDP80T00246A064200070001-1

[illegible] "ON" green light should go off, and the "READY" amber light [illegible] up.

[illegible] ck the controls for easy travel moving them from one extreme [illegible] the other.

[illegible] the check set the flying controls to the neutral position.

[illegible] ON: In case of the autopilot repeated switching on with an interval less than 20 sec. press the "M.V.G.GAGE" button.

[illegible] Use the autopilot in flight only in strict accordance with the requirements specified in this instruction.

II. FLYING WITH THE АП-23Д AUTOPILOT

[illegible] rcraft taxying, take-off and landing must be performed with [illegible] power supply on (the "READY" amber light on the control [illegible] on).

[illegible] uring taxying, take-off and landing the autopilot may be [illegible] only when the "SERVO UNITS" switch on the instrument panel [illegible] "OFF" position.

[illegible] fore switching on the autopilot in flight (by the "ON" button [illegible] topilot control hand grip), set the "SERVO UNITS" switch to [illegible] position.

[illegible] he autopilot may be used within the altitude range from 1000m. [illegible] m. at an indicated airspeed of not less than 300 km./hr.

[illegible] WITCHING ON THE AUTOPILOT SERVO UNITS

[illegible] pilot must:

[illegible] ter reaching an altitude of 1000 m. press the ГИК-1 gyro [illegible] "SYNCHRONIZATION" button and release it after the synchroni- [illegible] been completed.

Declassified in Part - Sanitized Copy Approved for Release 2011/12/14 : CIA-RDP80T00246A064200070001-1

Declassified in Part - Sanitized Copy Approved for Release 2011/12/14 : CIA-RDP80T00246A064200070001-1

fter entering the straight and level flight and completely
the aircraft turn on the "GYRO UNITS" switch, press the auto-
"ON" button on the autopilot control hand grip; this done, the
amber light on the control panel should go off, and the "ON"
ght must light up.

autopilot may be switched on at pitch and roll angles speci-
the pilot's flight operating instructions but not exceeding
0

ton set in operation in straight flight the autopilot stabilizes
raft attitude in direction, roll and pitch.

the autopilot is set in operation during a turn, the aircraft
es flying with bank and pitch angles which were at the moment
utopilot was switched on.

WARNING: Do not push the [illegible] synchronizing button with the autopilot servo units on, as this may cause sharp movement of the pedals if synchronization interlock with the autopilot on is not provided.

a level flight altitude must be maintained more precisely,
the altitude corrector by pressing the "ALT.CORR." button on
trol panel. The green light on the control panel labeled "ALT.",
ign should light up.

h the altitude corrector on, a turn may be accomplished by the
autopilot control hand grip.

member that when the autopilot control grip is moved for climb
the altitude corrector is automatically turned off and the
R." green light on the control panel goes off. At the moment
tude corrector is switched on, the aircraft rate of climb or
should not exceed ± 5 m./sec.

the altitude corrector is turned off when the aircraft is

Declassified in Part - Sanitized Copy Approved for Release 2011/12/14 : CIA-RDP80T00246A064200070001-1

Declassified in Part - Sanitized Copy Approved for Release 2011/12/14 : CIA-RDP80T00246A064200070001-1

to turn, switch the elevator corrector on only after a required of the aircraft is established.

CAUTION: When the autopilot is switched off, a jerk of the elevator may occur due to a change in its balancing during the flight. To avoid this during a continuous flight it is recommended to balance the aircraft periodically disengaging the autopilot.

case of a sharp change in the aircraft balancing, when a is dropped, for instance, the pilot must be ready to counteract ...ator jerk when the autopilot is disengaged.

B. AIRCRAFT CONTROL BY THE AUTOPILOT CONTROL HAND GRIP

...o perform a turn the pilot must:

...) Move the autopilot control hand grip for right or left bank. ...he aircraft reaches a required angle of bank, smoothly release ...ntrol grip to the neutral position. The aircraft will perform ...ordinated turn with the established bank.

...) To stop turning, recover the aircraft from bank by moving the ...ilot control hand grip in the opposite direction.

...o execute a dive or climb the pilot must:

...) Move the autopilot control hand grip for diving or climbing. ...he aircraft reaches a required angle of climb or dive, smoothly ...e the control hand grip to the neutral position.

...he aircraft will perform a diving or climbing flight with the ...ished angle of pitch.

...) To return the aircraft to level flight, move the autopilot ...l hand grip in the opposite direction.

...he pilot should remember that the angles of the control grip ...tion for right or left bank, climb and dive are proportional to

Declassified in Part - Sanitized Copy Approved for Release 2011/12/14 : CIA-RDP80T00246A064200070001-1

Declassified in Part - Sanitized Copy Approved for Release 2011/12/14 : CIA-RDP80T00246A064200070001-1

[illegible] of aircraft bank or pitch angle change.

[illegible]: When the aircraft enters or recovers from turn, slight jerks of the pedals may occur.

[illegible] AIRCRAFT CONTROL BY NAVIGATOR'S AUTOPILOT TURN CONTROL KNOB

[illegible] navigator must be certain the autopilot turn control knob is [illegible] neutral position.

[illegible] pilot must set the "CONTROL TRANSFER" selector switch on [illegible]trol panel to the "NAVIGATOR" position. This done, the amber [illegible] the control panel labeled "NAVIGATOR" should go on.

[illegible] navigator must:

[illegible] smoothly move the turn control knob for right or left bank [illegible]orm a turn.

[illegible]en the aircraft reaches a required angle of bank, stop moving [illegible] control knob and leave it in the deflected position. The air[illegible] will make a coordinated turn with the established angle of bank.

[illegible] To stop turning recover the aircraft from bank by setting the [illegible]ntrol knob in the neutral position.

[illegible]UTION: 1. Remember that the turn control knob deflection angle is proportional to the angle of aircraft bank.

2. When bringing the aircraft in or out of bank, move the turn control knob smoothly. No abrupt movement of the control grip is allowed.

[illegible] navigator should make certain the turn control knob is in [illegible]tral position.

[illegible] pilot must set the "CONTROL TRANSFER" selector switch [illegible] to the "PILOT" position. In this case, the [illegible] "NAVIGATOR" should go off.

Declassified in Part - Sanitized Copy Approved for Release 2011/12/14 : CIA-RDP80T00246A064200070001-1

Declassified in Part - Sanitized Copy Approved for Release 2011/12/14 : CIA-RDP80T00246A064200070001-1

...NING: When the turn control knob is deflected, the pilot must not set the "CONTROL TRANSFER" selector switch to the "PILOT" position.

...D. RETURNING THE AIRCRAFT TO LEVEL FLIGHT

...to return the aircraft to level flight the pilot or navigator ...h the "RETURN TO LEVEL FLIGHT" button.

...In this case the aircraft will be automatically brought to the ...titude corresponding to the straight and level flight position.

...e aircraft has been returned to level flight the altitude cor-...ector is automatically turned on, and the "ALT-CORR." green light on ...rol panel becomes illuminated.

The "RETURN TO LEVEL FLIGHT" button may be pressed with the ...t ON (the "ON" green light on the control panel is lighted), ...as with the autopilot OFF (the "READY" amber light on the con-...el is ON).

After the "RETURN TO LEVEL FLIGHT" button is pressed aircraft ...cannot be effected ... by the pilot's autopilot control hand ... by the navigator's turn control knob.

To use the normal control when flying at cruising speed after ...raft has been returned to level flight, the pilot should press ...pilot "ON" button on the pilot's autopilot control grip.

To avoid a jerk in pitch after the aircraft is returned to ...ght at other speeds with the altitude corrector off it is re-... to disengage the autopilot and check aircraft balancing.

...E. DISENGAGING THE AUTOPILOT

...disengage the autopilot the pilot must press the autopilot ...ment button on the control wheel. The autopilot may also be

Declassified in Part - Sanitized Copy Approved for Release 2011/12/14 : CIA-RDP80T00246A064200070001-1

Declassified in Part - Sanitized Copy Approved for Release 2011/12/14 : CIA-RDP80T00246A064200070001-1

...d by the co-pilot and navigator.

... "POWER" switch on the control panel may be used as an addi-
...witch for autopilot disengagement.

...E: Check and adjust the autopilot in test flights in accordance with the АП-28Д autopilot operation instructions.

S E C T I O N XII

AIRCRAFT OXYGEN EQUIPMENT

I. PRE-FLIGHT CHECK OF OXYGEN EQUIPMENT

The co-pilot must:

...efore entering the cockpit receive the flight engineer's ... liquid oxygen converters being prepared for operation.

...fter entering the cockpit measure the total quantity of liquid ... adding up the readings of the liquid oxygen level gauges ...arily turning on their power supply switch with ПО-750 ... operative.

... oxygen quantity should not be less than calculated.

...e-off with less quantity of oxygen is not allowed.

...ensure proper oxygen supply the oxygen should be contained in ... two oxygen converters.

...rovide a pure oxygen supply which is needed in case of fire ...er cases of emergency, one of the КПЖ-30 liquid oxygen con-... should contain not less than 8 kg. of oxygen in any flight.

... oxygen reserve for a flight is calculated by the aircraft ... equipment engineer together with the navigator when making ... calculation for a flight mission. Oxygen supply calculation ... is given in para. 4 of this section.

Declassified in Part - Sanitized Copy Approved for Release 2011/12/14 : CIA-RDP80T00246A064200070001-1

Declassified in Part - Sanitized Copy Approved for Release 2011/12/14 : CIA-RDP80T00246A064200070001-1

- Check oxygen pressure in the oxygen system. 10 minutes after the
omatic pressure regulator valves on the liquid oxygen converters
been opened, the pressure should be within the range of 8-10 kg/cm²

B. All the crew member must:

- Check airtightness of the system under pressure. For this pur-
open the KB-5Ф valve and close it. The built up pressure should be
ntained for at least 1-2 min. Check the pressure by a pressure
ge.

- Check the oxygen regulator low pressure system for airtightness.
this purpose, with the KB-5Ф valve closed, open the emergency oxygen
ly valve and relieve the pressure to zero. Close the emergency
gen supply valve. Put on and fit the mask and connect it to the
23 oxygen regulator hose.

- Check the mask for tight fitting by clutching up the corrugated
; impossibility to take a breath after this will indicate that the
is fitted properly.

- Close the oxygen diluter and try to make an inhalation. If this
t be done, the system is considered to be airtight.

- Check the oxygen regulator system for proper operation.
For this purpose open the regulator valve and observe the pressure
to make certain the oxygen pressure is within the range of 4 to
./cm² (the emergency oxygen supply valve should be closed, the
s pressure valve hand wheel should be turned right home clock-
.

Make several inhalations and exhirations through the mask with
oxygen diluter both closed and open. When the oxygen regulator
operates normally, breathing should be free, and the oxygen flow
tor shutters should move close and apart in time with the
hing.

Declassified in Part - Sanitized Copy Approved for Release 2011/12/14 : CIA-RDP80T00246A064200070001-1

Declassified in Part - Sanitized Copy Approved for Release 2011/12/14 : CIA-RDP80T00246A064200070001-1

II. OXYGEN SYSTEM OPERATION IN FLIGHT

In high-altitude flight all the crew members must:

use oxygen observing the oxygen flow indicator;

periodically check pressure in the aircraft oxygen system by
e gauges (the pressure should be within 8-10 kg./cm^2);

check position of the oxygen diluter levers, emergency oxygen
valve of the KP-24M oxygen regulator and the excess pressure
heel (irrespective of a flight altitude, at normal operation of
ygen regulator the oxygen diluter lever should be in the
ION" position, the emergency oxygen supply valve - in the
D" position, and the excess pressure valve hand wheel must be
clockwise as far as it will go).

WARNING: Before removing the mask from your face with the oxygen shut-off valve open, make a sharp espiration into the mask to prevent the oxygen from leaking through the mask into the aircraft cabin.

2. The co-pilot must check oxygen supply during the flight.

. During the flight at an altitude exceeding 4000 m. the gunner very 5 minutes report to the captain how he is feeling and on ion of the oxygen system.

. If no report is made by the gunner, the captain should ask the how he is feeling.

. If no answer is received from the gunner, the captain should d to an altitude of 1500-2000 m. and give a command to the air- radio operator to go to the tail compartment and see how is the .

. In case of a malfunction in the oxygen system of a crew member ure has dropped to zero, the oxygen flow indicator failed, and) the captain must descend to an altitude at which the cabin

Declassified in Part - Sanitized Copy Approved for Release 2011/12/14 : CIA-RDP80T00246A064200070001-1

Declassified in Part - Sanitized Copy Approved for Release 2011/12/14 : CIA-RDP80T00246A064200070001-1

tude does not exceed 4000 m.; if the aircraft compartments were
mpressed, the descend should be accomplished with maximum possible

III. CHECKING OPERATION OF OXYGEN EQUIPMENT IN CARGO COMPARTMENT

A. When preparing for flight, the checker must:

1. Open the KB-5Φ oxygen valves on the oxygen regulators panel.

2. Check pressure in the oxygen system by pressure gauges (the
sure should be within the range of 8-10 kg./cm.^{2}).

3. Check the oxygen system and indicators for airtightness and
R the emergency oxygen supply of each KI-32 oxygen regulator.
this purpose turn the oxygen emergency supply valve handle (red
our) till the supply line pressure gauge indicates a pressure of
g/cm.^{2}

4. Cut-out the emergency oxygen supply by setting the emergency
en supply valve handle to the initial position. With the masks
connected from the indicators the pressure should not drop for 5
tes.

5. Relieve pressure in the oxygen system by connecting the mask
the indicator.

6. Do not build up a pressure more than 4 kg./cm.^{2} in the oxygen
em on the ground.

B. In flight the checker must observe the following:

1. Oxygen system pressure should be within the range of 8 to
tm.

2. Actual pressure in the supply line at a certain altitude should
form to the pressure indicated in the table on the panel.

Declassified in Part - Sanitized Copy Approved for Release 2011/12/14 : CIA-RDP80T00246A064200070001-1

Declassified in Part - Sanitized Copy Approved for Release 2011/12/14 : CIA-RDP80T00246A064200070001-1

5. If the pressure of an oxygen regulator does not conform to that stated in the table, adjust the pressure by operating the emergency oxygen supply valve handle. To do this, turn the handle clockwise to increase the pressure and turn it counterclockwise to decrease the pressure.

IV. CALCULATING OXYGEN RESERVE FOR A FLIGHT

Calculate oxygen reserve according to the following formula:

$$G_п = G_н + \frac{60 \cdot t\,(qn + q_1 n_1 + q_2 n_2)}{750},$$

where $G_п$ - quantity of liquid oxygen required for a flight, kgs;

$G_н$ - quantity of liquid oxygen (6 kg for each liquid oxygen converter) that is not considered in the calculation;

t - flight duration, hrs;

q - oxygen consumption per one crew member using the КП-24М oxygen regulator. For КП-24М oxygen regulators in flight with pressurized cabins it should be 5 l/min. for all altitudes.

In flying with decompressed cabins the oxygen consumption should be considered to be 5 l/min. at an altitude up to 6000 m. and 2 l/min. at an altitude above 6000 m.

n - number of crew members;

q_1 - consumption (l/min.) per one person located in the cargo compartment and using the КП-32 oxygen regulator;

n_1 - number of passengers in the cargo compartment;

q_2 - oxygen consumption (l/min.) per one person located in attendants' compartment when using the КП-32 oxygen regulator;

n_2 - number of people in the attendant's compartment.

Declassified in Part - Sanitized Copy Approved for Release 2011/12/14 : CIA-RDP80T00246A064200070001-1

Declassified in Part - Sanitized Copy Approved for Release 2011/12/14 : CIA-RDP80T00246A064200070001-1

OXYGEN CONSUMPTION q_1 AND q_2 AT DIFFERENT ALTITUDES

Table 8.

ude, m.	2000	4000	6000	8000	10,000	12,000
mption, l/min.	1.5	3.5	4.5	5.5	6.5	7.0

o determine an oxygen consumption refer to the table.

s an altitude take the cabin altitude value.

o convert a flight altitude into the cabin altitude, refer to able below.

Table 9.

t altitude, m.	2000	4000	6000	8000	10,000	12,000
n altitude	2000	2000	2000	2800	3760	5,000

Declassified in Part - Sanitized Copy Approved for Release 2011/12/14 : CIA-RDP80T00246A064200070001-1

Declassified in Part - Sanitized Copy Approved for Release 2011/12/14 : CIA-RDP80T00246A064200070001-1

S E C T I O N XIII

CABIN AIR SYSTEM

I. BEFORE STARTING THE ENGINES

a) The co-pilot must:

- check that the cargo compartment vent shutter is open, and the o compartment heating system valve is closed;
- check that the engine air bleed valves and forward pressure air supply valve are closed.

b) The radio operator must:

- close all the circuit breakers of the cabin air system.

c) The gunner must:

- check that the cabin air supply valve is closed;
- set the three-position selector switch to the "COLD" position hold it for 25 sec. and then set it to the neutral position.

II. AFTER STARTING THE ENGINES

1. After starting and warming up the engines the co-pilot in the cockpit and the gunner in the tail cabin must check cabin pressurization for condition.

NOTE: 1. With the oil cooler ejectors off, air bleed from the engines to the cabin pressurization and heating systems is allowed at all engine ratings but the take-off rating.

2. Simultaneous air bleed to the oil cooler ejector and cabin pressurization and heating system is not allowed. When air is bled to the oil cooler ejector (in hot weather conditions) test the cabin pressurization and heating systems at an engine rating of 0.2 nominal

Declassified in Part - Sanitized Copy Approved for Release 2011/12/14 : CIA-RDP80T00246A064200070001-1

Declassified in Part - Sanitized Copy Approved for Release 2011/12/14 : CIA-RDP80T00246A064200070001-1

and higher; when testing the cabin pressurization and heating systems, cut off air bleed to the oil cooler ejector.

2. Make the test according to the following procedure:

4. The co-pilot must:

- Close the entrance doors and direct vision panels of the pres- cabins.
- Run the engine at 0.2 nominal rating.
- Pressurize the emergency escape door and check pressure in the ting strip seal by a pressure gauge; on the ground the pressure d be 3±0.5 kg./cm^2.
- Open the cabin air supply valve.
- Open the air bleed valve on the first engine and, observing ir flowmeter, make certain that air is supplied to the cabin. ssure difference in the cabin when checking the pressurization m should not exceed 0.03 kg./cm^2.
- Close the air bleed valve on the first engine and, following the dure outlined above, check air supply to the cabin from the other engines in due succession.
- Close the cabin air supply valve.
- Leave the air bleed valve of one engine open and give a command he gunner to check the tail cabin pressurization system.
- After the tail cabin pressurization system has been checked by gunner, close the engine air bleed valve.

ARNING: 1. When performing a flight without a gunner, set the three-position selector switch of the tail cabin air temperature regulator to the "COLD" position and hold it for 25 seconds, after which move it to the neutral position. Set the tail cabin air supply valve to the "CLOSED" position.

Declassified in Part - Sanitized Copy Approved for Release 2011/12/14 : CIA-RDP80T00246A064200070001-1

Declassified in Part - Sanitized Copy Approved for Release 2011/12/14 : CIA-RDP80T00246A064200070001-1

2. During take-off the engines air bleed valves should be closed.

The gunner must:

Receive a co- pilot's permission for cheking cabin pressuriza-

Pressure seal the emergency escape door and, observing a pres- age, check pressure in the inflating strip seal; on the ground ssure should be 3 -0.5 kg.cm^2.

Open the cabin air supply valve and make certain (by the air er) that air is supplied to the cabin. In this case observing III-15 altitude and differential pressure indicator, see that re in the cabin does not exceed 0.03 atm.

Close the cabin air supply valve.

III. IN FLIGHT

Turn on air bleed for the cabin pressurization and heating sys- after take-off when the engines are running at a speed below the off rating.

A. In flight the co-pilot must:

After turning on air bleed, establish required air consumption by air flowmeter corresponding to 3-5 scale divisions. Adjust the ied air temperature manually, maintaining it not in excess of 110° heating the cabin).

When temperature in the cabin corresponds to that indicated e thermostat dial (16 to 26°C), turn the three position selec- switch to the "Automatic" position.

When necessary, the temperature may be adjusted manually by ng the cabin air temperature regulator selector switches to the

Declassified in Part - Sanitized Copy Approved for Release 2011/12/14 : CIA-RDP80T00246A064200070001-1

Declassified in Part - Sanitized Copy Approved for Release 2011/12/14 : CIA-RDP80T00246A064200070001-1

or "Cold" positions for a short period of time(in flight the ature of air supplied to the cabin should not exceed +100°C); of window freezing the air consumption is allowed to be 9 scale divisions by the air flowmeter.

cool the air supplied to the cabin turn on the cooling tur- establishing the required air consumption by the air flow- within 3-5 scale divisions.

ventilate the forward pressure cabin with outside air at altitudes close the engine air bleed valves and the cabin pply valves and open the air intake shutter on the starboard of the cargo attendants' cabin.

f necessary to heat the cargo compartment, check that the Compartment Ventilation" shutters are open and turn on the Compartment Heater" selector switch to the "Open" position.

B. The gunner must:

just the temperature of air in the cabin by the cabin air rature regulator selector switch.

en a cabin air temperature reaches the value preset on the of the cabin air temperature regulator (15 to 25°C): set the tor switch to the "Automatic" position.

n ventilating the tail cabin with outside air at low altitudes, the ventilating valve and close the cabin air supply valve.

NOTE: Pressure difference in the pressure cabins changes in a certain order. Up to the altitude of 2,000m. the pressure difference should not exceed 0.05 kg/cm²; from 2,000m. to 7,100m. the pressure difference in the cabin remains constant; at an altitude of 7,100m. the pressure difference in the cabin reaches 0.4± ±0.02 kg/cm² and remains constant with further altitude.

Declassified in Part - Sanitized Copy Approved for Release 2011/12/14 : CIA-RDP80T00246A064200070001-1

Declassified in Part - Sanitized Copy Approved for Release 2011/12/14 : CIA-RDP80T00246A064200070001-1

S E C T I O N XIV

AIRCRAFT DE-ICING SYSTEM

I. Pre-Flight Procedure

A. Before starting the engines.

. Inspect the propellers and their spinners paying particular
ion to the blade heating elements.

. Inspect the leading edges of the wing and tail unit for possible
eformation due to temperature changes.

. Inspect the aircraft glass panels for security, check the ther-
and glass wiper brushes for condition.

. The radio operator must close all the circuit breakers of the
ng system on the circuit breaker panel.

. The navigator must close the glass heater circuit breakers lo-
on the right instrument panel.

. The co-pilot must:

turn on the "TAIL UNIT HEATER" switch for 20 seconds checkin
operation by the indicator light. the radio operator must check
t drawn by the tail unit thermoelectric de-icing system. The cur-
rawn should be within the range of 640 to 670 A (with no external
supply source make the check with the engines running at a speed
nominal).

NOTE: To prevent the TA-600 fuse from burning out when checking
the tail unit de-icers from external power supply sources
turn the switch on the engine starting panel to the
"BATTERIES FOR STARTING" position.

Pay attention to the wing ice formation warning light (the
g light should be ON).

Declassified in Part - Sanitized Copy Approved for Release 2011/12/14 : CIA-RDP80T00246A064200070001-1

Declassified in Part - Sanitized Copy Approved for Release 2011/12/14 : CIA-RDP80T00246A064200070001-1

- Turn on the "GUIDE VANES ICE FORMATION" switch for 5 to 10 se-
s (all the four warning lights should be ON). If any of the lights
ins off, check the ice formation warning system of the correspond-
engine.

WARNING: Never turn on the "GUIDE VANES ICE FORMATION" switch for a period longer than 10 seconds with the engines inoperative. When even one of the engines stops on the ground, immediately turn off the "GUIDE VANES ICE FORMATION" switch.

B. When starting and testing the engines.

To test the de-icing system the crew should proceed as follows:

1. The co-pilot must:

- When running the engine at 0.4 nominal speed, turn on the
ELLER AND SPINNER HEATER" switch, the radio operator should check
.C. current drawn by the de-icing system which should be 45 to

- Test the thermoelectric de-icing system of the propeller with
ngines running if it has not been tested from an external power
y source.

- Turn on the "WINDSCREEN WIPER" switch and in two minutes check
emperature of the electrically heated glass panes by touch from
utside. With the heating system operating normally, the glass
d be warm.

- Turn on the "AIR BLEED" and "WING DE-ICER" switches and check
tion of the wing hot-air de-icer system by observing the warning
s. Turn off the system immediately after the lights go on.

Declassified in Part - Sanitized Copy Approved for Release 2011/12/14 : CIA-RDP80T00246A064200070001-1

Declassified in Part - Sanitized Copy Approved for Release 2011/12/14 : CIA-RDP80T00246A064200070001-1

2. The pilot must:

Turn on the "WINDSCREEN HEATER" switch and check the temperature of electrically heated glass panels by touch from the outside. When heating system operates properly, the glass should be warm.

3. The navigator must:

Turn on the "WINDOW HEATING" switch and in two minutes check the temperature of the electrically heated glass by touch. When the system works properly, the glass should be warm.

II. AT TAKE-OFF

1. Never turn on the wing de-icing system at take-off.

2. When it is necessary to take-off in icing conditions (drizzle mist), prior to the take-off turn on the de-icer system of the engine air intakes, oil coolers and engine guide vanes, the de-icer system of the propellers and their spinners and the Pitot tube heaters.

III. IN FLIGHT

1. When flying in icing conditions (low temperature of outside air, rain), the de-icer system of the engine air intakes, oil coolers and engine guide vanes, the de-icer system of the propellers and their spinners, and the Pitot tube heaters must be switched on immediately after take-off for the whole flight. The systems are turned on by the switches "WING HEATER", "PROPELLER AND SPINNER HEATER", "PITOT HEATER" respectively.

2. When the aircraft enters an icing zone, turn on all the aircraft de-icer systems and Pitot tube heater.

3. Ice formation on aircraft is indicated by:

- guide vanes ice formation warning lights blinking;

Declassified in Part - Sanitized Copy Approved for Release 2011/12/14 : CIA-RDP80T00246A064200070001-1

Declassified in Part - Sanitized Copy Approved for Release 2011/12/14 : CIA-RDP80T00246A064200070001-1

- wing ice formation warning light going on;
- ice formation on the cockpit glass panels and other aircraft

. When the aircraft leaves the icing zone turn off all the de- systems.

NOTE: When flight is continued in probable icing conditions, do not turn off the de-icer system of the engine air intakes, oil coolers and engine guide vanes, the de-icer system of the propellers and their spinners and the Pitot tube heaters.

5. After the flight in icing conditions thoroughly inspect:
- the guide vanes and blades of the first stages of the engine essors;
- the propellers and their spinners;
- the wing and tail unit skin for condition;
- aircraft cabin heated glass panels.

IV. ABNORMAL AND EMERGENCY OPERATION

1. All night flights in icing conditions (low outside air tempe- e, clouds, drizzle, sleet) must be performed with the de-icer sys- of the engine air intakes, oil coolers, guide vanes, propellers ropeller spinners and the Pitot tube heater ON.

2. When ice formation is indicated (engine guide vanes and wing ormation warning lights light up), turn on all the aircraft de- systems.

3. When flying in rain, switch on the Pitot tube heater and glass s.

WARNING: Turn on the glass wipers only when the glass panels are wet.

Declassified in Part - Sanitized Copy Approved for Release 2011/12/14 : CIA-RDP80T00246A064200070001-1

Declassified in Part - Sanitized Copy Approved for Release 2011/12/14 : CIA-RDP80T00246A064200070001-1

S E C T I O N XV

CREW MEMBERS' OPERATING INSTRUCTIONS

A. NAVIGATOR'S OPERATING INSTRUCTIONS

Installed in the aircraft are navigational, radio and radar ...ment which allows to fly both by day and night under normal and ...rse weather conditions.

I. Inspecting the Equipment

1. On arriving at the aircraft the navigator must receive the ...ialists' reports on preparation of the navigational, radio and ...r equipment for flight.

2. Inspect the equipment visually, ensure that it is serviceable. ...check that:

- the caps are removed from the astro tracker unit and sight ... of the СП-I sextant;
- the covers are removed from the Pitot tubes and plugs from ...ic holes on the aircraft left and right sides;
- the РБП-3 radome is not damaged;
- the plugs are removed from the ЭКСП-3Э flare magazines and flares are present in the magazines;
- the bomb doors on the right and left I.O. fairings are closed.

3. Visually inspect the cabins and check:

- the cabins windows for cleanliness and damage;
- the СП-I air sextant and chronometer for serviceability and the right time;
- open the oxygen valve in the pressurized cabin.

Declassified in Part - Sanitized Copy Approved for Release 2011/12/14 : CIA-RDP80T00246A064200070001-1

Declassified in Part - Sanitized Copy Approved for Release 2011/12/14 : CIA-RDP80T00246A064200070001-1

4. Visually inspect the station and check:

- the parachute, place it into the seat bucket and adjust the belts;

- the readiness of the oxygen equipment; to do this, open the valve (the oxygen pressure should be 8-10 kg./cm.^{2}), close the valve, fit the oxygen mask and connect it to the КП-23 oxygen ator hose.

5. Check the mentioned below units for security of attachment, , for proper connection of plug connectors and positions of controls;

- ПВК-52 directional gyro and its control panel;
- СПУ-7 intercommunicating system;
- direction indicator, counter and wind unit of the НЧ-50БМ
- position indicator;
- ИК-24 oxygen indicator and "USE OXYGEN" warning light;
- ДАК-ДБ-5 astro compass units;
- "WINDOW HEATING" and "FAN" switches and U.V.L. theostats;
- АРК-9 ADF Nos. 1 and 2 control panels;
- УК-I direction indicators and track corrector of the ДАК-ДБ-5 astro compass and ТНВ-15 ambient air thermometer;
- "ASTROCOMP.TO PILOT'S ADF INDICATOR" selector switch in ADF on);
- АРК-5 ADF indicators, ГИК-I gyro flux gate compass, ВД-10 ter, КУС-1200 air speed indicator, АРБ-2 artificial horizon and clock;
- switches on the cargo door control panel;
- positions of the АП-28Т autopilot controls;
- circuit breakers panel (all the switches should be OFF);
- units of the РЛС, remote control panel, scan and range units, unit, waveguide pressure gauge and pressure transmitter of the

Declassified in Part - Sanitized Copy Approved for Release 2011/12/14 : CIA-RDP80T00246A064200070001-1

Declassified in Part - Sanitized Copy Approved for Release 2011/12/14 : CIA-RDP80T00246A064200070001-1

bombing-navigational radar.

.C. and A.C. meters and presence of the Air Almanac instrument
ion cards and flight map.

After starting the engines perform the electrical check of the
igational aids for functioning; to do this:

urn ON the switch on the navigator's circuit breaker panel;

nergize the ГПК-52 directional gyro and ДАК-ДБ-5 astro com-

tune the АРК-5 ADF No.1 to the airport nearest radio station and
DF No.2 to the distant radio station, listen to their call sig-
ompare the radio station relative bearings and, rotating the loop
y, check it for smooth rotation. After this de-energize the
DFs;

check the ДАК-ДБ-5 astro compass for proper functioning: to do

wind the clock mechanism by pressing the "CLOCK MECHANISM
" button 4-5 times.

Being sure that the "WARM-UP" light is not illuminated and the
light comes on ones per minute, set the magnetic variation,
el body HA, latitude and longitude of the aircraft on the

.

URTIONS: 1. With 27 and 115 v power not applied, do not turn the coordinate setting knobs on the counter.

2. If the "TEST" light comes on when setting the coordinates, turn the knob, which has been used for setting the coordinate, in the opposite direction until the "TEST" light goes out and begin to set the coordinates using the other knobs.

with the sun visible read the true heading on the УК-1

Declassified in Part - Sanitized Copy Approved for Release 2011/12/14 : CIA-RDP80T00246A064200070001-1

Declassified in Part - Sanitized Copy Approved for Release 2011/12/14 : CIA-RDP80T00246A064200070001-1

...ion indicator on the navigator's instrument panel with the "ASTRO-
...R - SEXTANT" selector switch in "ASTRO-TRACKER" position;
...) to check the track corrector, preset a ground speed of
.../hr.; in this case the "TRACK" pointer should move in pulses
...each illuminations of the "TEST" light up to 600 km. within 6 min;
...) having ensured that the astro compass operates reliably, set
...inters of the track corrector to zero and switch OFF the power.
... When using the СП-I air sextant during a flight check its
...ion and the ДАК-ДБ-5 astro compass operation in conjunction with
...xtant.

... Check the ГПК-52 directional gyro using the following procedure:
...n 6 minutes after switching ON the ГПК-52 directional gyro the
...ument readings should be steady.
...Compare the readings of the directional gyro with that of its
...ters; the difference in their readings should not exceed ± 1°.
...setting the push knob of the course preset unit on the control
... in the position marked "Л" (left) or "П" (right) the ГПК-52
...tional gyro dial should rotate with a speed of 90 deg. per minute;
...hen the knob is turned up to the stop the dial should rotate with
...ed of 150-180 deg. per minute.

NOTE: When flying in low latitudes of southern hemisphere with "LATITUDE" knob set on zero the dial drift should exceed the allowance given in the certificate:
- for latitudes up to 5° - 1.5 deg./hr.
- for latitudes up to 10° - 2.5 deg./hr.

... Check the ГИК-I gyro flux gate compass operation; to do this ... min. after energizing the instrument push the synchronizing ... compare the readings of the ГИК-I gyro flux gate compass with ... the КИ-13 compass.

... Check the НУ-50ВМ ground position indicator operation; to do ...

Declassified in Part - Sanitized Copy Approved for Release 2011/12/14 : CIA-RDP80T00246A064200070001-1

Declassified in Part - Sanitized Copy Approved for Release 2011/12/14 : CIA-RDP80T00246A064200070001-1

Compare the readings of the [illegible]-50[illegible] ground position indicator with [illegible] of [illegible]-I gyro flux gate compass; the difference should not [illegible] +1°.

Set the map angle equal to magnetic heading on the direction indi-[illegible], wind direction equal to the magnetic heading and wind speed of [illegible] km./hr.

Set the pointers of the counter to zero. In 5 min. the pointer [illegible] "C" (N) should indicate 10 km. and the pointer marked "B"(E) - [illegible]

Set the wind direction equal to magnetic heading plus 90°; in [illegible] the pointer marked "C" should stay on 10 km. point, and the [illegible]er marked "B" should move right to the point marked 10 km.

Set the necessary calculated flight data on the ground position [illegible]ator and switch OFF its circuit breaker.

7. When preparing for night flying check the cabin, instruments [illegible]avigator's instrument panel illumination.

8. After checking of all the equipment and station, turn off all circuit breakers and report the captain about the check results.

2. Preparing For Flight

When preparing for flight the navigator must do the following:

- occupy the seat, fasten the seat belts, connect the headset plug [illegible]e plug of the СПУ-7 intercommunication control box cord and check communication with the crew members;
- set the right time on the clock and barometric pressure on the [illegible]-10 altimeter;
- check the A.C. and D.C. voltage, switch ON the circuit breakers [illegible]e navigator's instrument panel;
- energize the ГПК-52 directional gyro and check setting of the [illegible]titude;

Declassified in Part - Sanitized Copy Approved for Release 2011/12/14 : CIA-RDP80T00246A064200070001-1

Declassified in Part - Sanitized Copy Approved for Release 2011/12/14 : CIA-RDP80T00246A064200070001-1

switch ON the АРК-5 ARKs [illegible] and 2 and check their tuning;

switch ON the 27 v and 115 v power supply switches on the ДАК-ДБ-5 astro compass counter;

synchronize the ГИК-I compass system;

ensure that the ДАК-ДБ-5 astro compass functions properly by ... illumination of the "TEST" light, and set the coordinates on ... unter;

check setting of the necessary data on the НИ-50БМ ground posi- ... dicator;

at altitude flying open the КВ-5ф oxygen valve, put on the oxygen ... and check its connection to the hose of the КП-23 oxygen regu-

report the captain about readiness for flying.

3. Flying in the Vicinity of an Airport

When taxying observe the forward hemisphere and report the pilot ... ll the obstacles observed.

After taxying to the take-off position synchronize the ГИК-I ... system, set the ГПК-52 directional gyro dial to the take-off ... c heading; in this case the readings of the УШ-2 navigator's ... tor and ГИК-I flux gate compass should correspond to the take-off ... c heading and the readings of the automatic direction finders ... be 0 or 180°, check setting of the ВД-10 altimeter pointers on ... d report the captain about the readiness for take-off.

... case of the cabin window panels misting or possible icing switch ... fan and window heating system.

When the aircraft starts movement for take-off, set the clock ... atch, press the "TIME OF TRI" button and switch ON the НИ-50БМ ... d position indicator circuit breaker.

Declassified in Part - Sanitized Copy Approved for Release 2011/12/14 : CIA-RDP80T00246A064200070001-1

Declassified in Part - Sanitized Copy Approved for Release 2011/12/14 : CIA-RDP80T00246A064200070001-1

See that the take-off direction is held and report the captain reaching speeds of 150,210, 300 km./hr. and an altitude of 100m. Record the take-off time and heading in the flight log and at an ude of 150 m. inform the captain to begin the first turn.

4. See that the required flight condition and traffic pattern aintained.

5. If a wind exists, consider the drift angle on the straight f the rectangular pattern and at the beginnings of turns.

6. When flying to the flying zone guide the aircraft to the ed area. Determine the aircraft position in the flying zone using MK-50BM and PSB-S radar indicators readings and bearings of distant radio station. Periodically report the captain on the raft position and flying time within the flying zone, return the raft to the flying zone if it has left the latter, check the t altitude and air speed.

7. Before entering the final approach or reaching the point of ning of descent compare the readings of the MRK-52 directional and APK-5 ADF, help the pilot to enter the final approach. Report pilot about the distance to the distant radio station, the altiand time of passing over the distant radio station, the gliding d and passing over the nearest radio station.

8. Before touchdown de-energize the PSB-S radar.

When turning off the runway stop the clock and record the time nding.

4. Flight Over a Route

Before flying over a route properly prepare for flight in accordwith the flight plan.

Besides this, the navigator must:

1. Accurately follow the navigator's flight-plan;

Declassified in Part - Sanitized Copy Approved for Release 2011/12/14 : CIA-RDP80T00246A064200070001-1

Declassified in Part - Sanitized Copy Approved for Release 2011/12/14 : CIA-RDP80T00246A064200070001-1

- After take-off conduct the aircraft to the flight route;
- When climbing, switch ON the РБП-3 radar;
- Inform the radio operator about the time of departure, heading, tude, ground speed and meteorological conditions of flight;
- during flight report the captain about the aircraft ground ion, time of passing over the verified reference points and of arrival to the distination point.
when the change in latitude exceed 2°, introduce the latitude ction on the ГПК-52 directional gyro control panel, and when the t duration is more than 2 hours correct the heading readings;
- in case of severe cumuliform clouds, observe the thunderstorms the РБП-3 radar, report the captain on the direction of their ent and distance to them;
- when breaking through clouds conduct the aircraft to the initi- int of approach using РБП-3 radar and АРК-5 ADF;
- on the captain's command set the barometric pressure correspond- to that of the airfield of destination on the ВД-10 altimeter;
- break the clouds and make an approach according to the cloud ing pattern prescribed for the given airfield and the instruc- obtained from the airfield traffic controller.
fter the flight is completed, put the station in order and re- the captain and equipment specialist on the equipment operation.

B. FLIGHT ENGINEER'S OPERATING INSTRUCTIONS

I. Aircraft Pre-Flight Inspection

During the aircraft pre-flight inspection the flight engineer ks up the pre-flight inspection carried out by the ground service onnel in charge of different systems, as well as replenishing the raft systems with fuel, oil, АМГ-10 oil, liquid oxygen (кис- ssed air and nitrogen.

Declassified in Part - Sanitized Copy Approved for Release 2011/12/14 : CIA-RDP80T00246A064200070001-1

Declassified in Part - Sanitized Copy Approved for Release 2011/12/14 : CIA-RDP80T00246A064200070001-1

[redacted] simultaneously he inspects the aircraft in accordance
e exterior inspection route.

A. Aircraft External Inspection

n carrying out an external inspection make sure that:
. eight chocks are placed around the L.G. wheels;
. there are no obstacles under the aircraft and in front of the
ft within a distance of 1.5 span;
. ground fire-extinguishing equipment is available;
. the wing, fuselage, tail unit, control surfaces and ailerons
ee from ice and snow;
. all the plugs and covers are removed;
. In addition inspect the following:
) Fuselage nose section
. Check that:
- the cockpit window panels are free from cracks, deep scratches
er" and dirt;
- the clamp is removed from the nose L.G. down lock;
- the nose L.G. down lock is secured properly by observing the
holes and center punching;
- there are no forein objects in the nose L.G. well;
- the AMT-10 oil does not leak in the nose L.G. well and in the
ency escape door well;
- the L.G. up lock is opened;
- the emergency escape door lock is closed (the checking pin must
epressed);
- the aircraft landing light and antenna are in good condition;
- check the nose L.G. shock strut, steering control mechanism,
yres for condition and the tyre upsetting pressure;
- check the nose L.G. suspension clamp for reliable operation.

Declassified in Part - Sanitized Copy Approved for Release 2011/12/14 : CIA-RDP80T00246A064200070001-1

Declassified in Part - Sanitized Copy Approved for Release 2011/12/14 : CIA-RDP80T00246A064200070001-1

b) Fuselage starboard

- Check that:
- the plugs are removed from the static holes;
- the front and rear cargo doors are securely closed;
- all the A3C and A3P circuit breakers on the pressure fueling ol panel are off;
- all the aircraft hydraulic system valves and pipe connectors losed and locked;
- check the landing light for condition.

c) Right wing

- Check that the fuel does not leak from under the wing bottom s through the vent pipes and the AMT-10 fluid does not leak under the wing-to-fuselage fairing.
- Check that the hinged panels and access doors locks are closed;
- Check position of the aileron trim tab.

d) Engines Nos. 3 and 4.

- See that there are no signs indicating turbine overheating, rmining by condition of the turbine third stage blades.
- Check that the fuel, oil and AMT-10 oil do not leak;
- Check that the cowl latches are locked and secured;
- Check the propeller blades for damage.

e) Right L.G. leg and well

- Check the shock strut and tyres for condition, check the tyre tting pressure;
- Check that the L.G. down lock is closed;
- Check that the L.G. up lock is opened;
- Check that the L.G. suspension clamp for reliable operation;

Declassified in Part - Sanitized Copy Approved for Release 2011/12/14 : CIA-RDP80T00246A064200070001-1

Declassified in Part - Sanitized Copy Approved for Release 2011/12/14 : CIA-RDP80T00246A064200070001-1

Check that the L.G. well is free from foreign objects and the fluid does not leak from the hydraulic system connections and

Check that the grounding cable is retracted;

Check that the hydraulic tank pressure relief valve is closed;

Check that the L.G. doors are closed.

c) On fuselage tail section and tail unit

Check that the compressed air charging valve is closed;

Check the cargo doors for closing and condition;

Check that the bomb doors and gunner's emergency escape door are d;

Check that the trim tabs of the [illegible] are in eutral position.

7. Inspect the fuselage [illegible] s those of the starboard. On [illegible] inspection carry he cabin inspection.

B. Aircraft Cabin Inspection

Inspect visually and make sure that:

a) on radio-operator's control panel:

all the ABC and ABP circuit breakers are switched off;

the "EXT.PWR.-AIRCRAFT SYSTEM" selector switch is set to PWR." position;

all the generators are switched off;

the aircraft electric system voltage by the voltmeter is 28 to

b) on copilot's starboard console

the switches for bleeding the air from the engines to pressurize cabin and for heating the wing are in "OFF" position;

Declassified in Part - Sanitized Copy Approved for Release 2011/12/14 : CIA-RDP80T00246A064200070001-1

Declassified in Part - Sanitized Copy Approved for Release 2011/12/14 : CIA-RDP80T00246A064200070001-1

The L.G. and flaps control valves are in the neutral position and

the engine cut-out valves are opened and sealed;

the cabin pressurization valves are in the rear extreme position;

the L.G. emergency extension and doors opening valves are in the

l position;

the guide vanes assembly heating control switch is in "OFF" posi-

c) On Right Instrument Panel

all the switches are in "OFF" position;

the oil contents in each of the oil tanks equal 50 litres (by the

ontents gauge).

OTE: If the oil has flown from the oil tank to the engine and the oil contents gauge indicates less than 35 litres, then before starting the engine perform cold running of the engine.

d) On Centre Instrument Panel

the fuel contents indicated by the fuel contents gauge correspond

o volume given in the fuelling list;

the fuel system booster pumps and warning light system operate

ly;

the shut-off valve and cross-feed system are reliable;

the oil temperature regulator is reliable;

the instrument glasses are not damaged;

the flap position indicator readings correspond to the position of

laps;

the fire extinguishing system solenoid valves operate properly;

the warning light system is reliable;

the fire extinguishing system selector switch is in the "FIRE

GUISHING" position;

the engine fuel shut-off valves are open (the four green lights

illuminate);

Declassified in Part - Sanitized Copy Approved for Release 2011/12/14 : CIA-RDP80T00246A064200070001-1

Declassified in Part - Sanitized Copy Approved for Release 2011/12/14 : CIA-RDP80T00246A064200070001-1

Four "PROPELLER PITCH TOP RELEASED" red warning lights
nate;

MГ-10 fluid contents in the hydraulic reservoirs (with the
lic accumulators discharged) are: 25 litres in the right
oir and 27 litres in the left reservoir ;

L.G. warning system operates reliably.

n Roof Remote Control Panel

automatic feathering and negative thrust test switches are in
position;

propeller pitch stop release selector switches are in the
OP. PITCH TOP RELEASED position;

"EMERGENCY TOP AND FEATHERING" valves are switched off and
d.

n Left Instrument Panel

windscreen heating control switch is in [illegible] position.

the Pilot's Port Console

"FLIGHT RESTART" switches are in [illegible] position;

engine power control levers are in the [illegible] position;

engine cut-out switches are in the [illegible] position;

L.G. and flaps control valves are in the neutral position
ocked;

heck that the parking brakes are applied.

sing the hand pump build up a pressure in the left hydraulic
mulator of not less than 60kg/cm^2.

When running the engines No.3 or No.4, with the engines
Nos.1 and 2 inoperative, open the hydraulic system cross
feed valve.

Declassified in Part - Sanitized Copy Approved for Release 2011/12/14 : CIA-RDP80T00246A064200070001-1

Declassified in Part - Sanitized Copy Approved for Release 2011/12/14 : CIA-RDP80T00246A064200070001-1

At the flight engineer's station check the oxygen regulator for
on, see that the oxygen mask is available and connect it to the
oxygen regulator hose.
Report the captain that the engines are ready to start.

C. ENGINES STARTING AND TESTING

receiving a report from the ground crew man through the CLV-7 in-
unication system that the aircraft is prepared for starting the
, the flight engineer together with the captain starts and tests
ines in accordance with the AM-20 Engines Operation Instructions.

After testing the engines:

nspect the cowlings and make sure that there is no leakage of the
el and hydraulic fluid. Open the cowl side panels. Check the pipe-
ts connections for condition and the engine control rods and levers
liable connection.
Check the oil contents in the tanks. Close and secure the side cowl

ort the captain that the aircraft is prepared for flight.

II. FLIGHT ENGINEER'S FLIGHT OPERATING INSTRUCTIONS

ogether with the captain start the engines.
the captain's command give a signal to the ground crew man to
ect the ground power supply source from the aircraft and to remove
, chocks from the wheels.
efore laying out switch on:
ropeller automatic feathering switch (green lights should be ON);
el automatic consumption control switch;
el flow meters;
uxiliary group booster pumps;
il temperature automatic control selector switches and set them to
"AUTOMATIC" position;

Declassified in Part - Sanitized Copy Approved for Release 2011/12/14 : CIA-RDP80T00246A064200070001-1

Declassified in Part - Sanitized Copy Approved for Release 2011/12/14 : CIA-RDP80T00246A064200070001-1

utomatic pilot (gyro units) supply.

OTE: Before taxying out and before landing always switch on the autopilot gyro units supply.

heck that:

utomatic feathering test switches are in "OFF" position;

ight sign "L.G.DOORS CLOSED" illuminates;

round power supply source is disconnected;

ropeller pitch hydraulic stops are released;

ir bleed from the engines is OFF;

nti-skid control is ON;

he L.C. and flaps control valves are in the neutral position;

eport the captain that the aircraft is ready to taxy out.

4. Taxying Out

hen taxying the flight engineer watches:

ngine instruments readings;

ine ratings; and informs the captain when the engines operate at

atings (from 0° by the УПРТ-2 indicator to flight idle speed).

5. Take-Off

efore take-off the flight engineer must check up and report the

e must:

ropeller pitch stops are on;

ngine instruments readings are normal;

laps are deflected through the take-off angle.

hen moving the engine power control levers to increase the engines

atch the readings of the ИТЭ-2 tachometer, ИКМ torque pressure

ator, ЭМИ-3РИ engine gauge units and fuel flowmeters.

uring the take-off the flight engineer must:

heck the engine operation by the instruments paying special atten-

Declassified in Part - Sanitized Copy Approved for Release 2011/12/14 : CIA-RDP80T00246A064200070001-1

Declassified in Part - Sanitized Copy Approved for Release 2011/12/14 : CIA-RDP80T00246A064200070001-1

...indicator;

...ssure gauge readings indicated by ЭМИ-3РИ engine gauge units;

...M torque pressure indicator;

...aust gas thermometer;

...-2 tachometer.

...Be ready by the captain's command to feather the propellers should ...he engines fail.

...Report to the captain about the L.G. and flap retract for M.G. ...s are fully retracted, the L.G. doors are closed".

6. In Flight

...During the flight check the engine operation by the instruments. ...cial attention to the same instruments as during the take-off.

...Before pressurizing the cabins ensure visually from the cargo ...ment that the fuel, oil and AMT-10 fluid do not leak from the ...nacelles and wing, close the doors and windows on the pressure bulk-...

...Check the fuel contents in the tank groups and control sequence of ...nsumption, periodically inform the captain about the fuel reserve.

...Should the fuel be consumed from the tank groups unevenly ...en the cross-feed valve, set the fuel consumption control switch so ...upply the fuel from that half-wing in the tank group of which the ...ntents are larger;

...equalizing the fuel quantity in the tank groups, switch off the ...nsumption control switch (set it to the neutral position), then ...he cross-feed valve;

...the automatic fuel consumption system fails switch on the АЗР ...breakers of the following tank group fuel pumps and more thorough-...k up the fuel consumption; set the "AUTOMATIC-MANUAL" switch to the ..." position.

...Check the oil contents in the engine tanks.

Declassified in Part - Sanitized Copy Approved for Release 2011/12/14 : CIA-RDP80T00246A064200070001-1

Declassified in Part - Sanitized Copy Approved for Release 2011/12/14 : CIA-RDP80T00246A064200070001-1

Check the quantity of the AMT-10 fluid in the hydraulic reservoirs necessary, transfer the AMT-10 fluid by the hand pump.

Check how the co-pilot operates the cabin pressurizing system, system of the aircraft, guide vanes assembly and Pitot tube. Report the captain about all cases of the engine and equipment operation and then act in accordance with his instructions.

When approaching for landing the flight engineer must:

ring a descent watch how the co-pilot operates the cabin pres- equipment paying special attention to the cabin differential indicated by the altitude and differential pressure indicator;

as the cabin is decompressed by the co-pilot (at differential of 0.01 to 0.02 kg./cm.^{2}) open the window on the pressure bulk-

.

s that the propeller pitch stop control switches are in the ITCH STOP ON" position (the red lights do not illuminate).

y the captain's command to the co-pilot to extend the L.G., watch system operation and report the captain about the L.G. extension L.G. doors closing ("L.G. are fully extended, L.G. doors are

).

the captain's command to the co-pilot to extend the flaps through atch the flaps extension and report the captain that the flaps are ed through 25°.

the captain's command to extend the flaps through 35°, watch the eflection and report to the captain that the flaps are deflected 35°.

that:

L.G. control lever is in the neutral position and locked;

flaps control switch is in the neutral position and locked;

air-bleed-from-the-engines control switches are in "CLOSED" posi-

Declassified in Part - Sanitized Copy Approved for Release 2011/12/14 : CIA-RDP80T00246A064200070001-1

Declassified in Part - Sanitized Copy Approved for Release 2011/12/14 : CIA-RDP80T00246A064200070001-1

ing heating control switch is in "OFF" position;

the switches of the guide vane assembly, tail unit, propellers

nners heating systems are in "OFF" position.

ter taxying cool and switch off the engines according to the

ngine Operation Instructions.

k all the crew members about the defects noticed in flight and

hem into the check list.

ganize the after-flight inspection of the aircraft in accordance

he chief's instructions.

C. RADIO OPERATOR'S OPERATING INSTRUCTIONS

I. PRE-FLIGHT INSPECTION

1. Visual Inspection

ing visual inspection the radio operator must:

make sure that:

the antennas are in good condition, the partition insulators

rom dirt and damages;

the external power supply receptacles are in good condition;

the antenna wiring is properly and reliably connected to the

nsulators and the units;

the switch panels, control panels; casings and front panels

equipment, electric instruments, circuit breakers and switches

rom damages;

the fuses installed in the units are securely attached and

mages;

the tuning tables for the communication and command radio

fuses and spare set of valves in sealed boxes are available;

the radio operator's station is equipped with a microphone and

t having throat microphones;

) Check the KH-24M oxygen regulator and mask for proper condition

Declassified in Part - Sanitized Copy Approved for Release 2011/12/14 : CIA-RDP80T00246A064200070001-1

Declassified in Part - Sanitized Copy Approved for Release 2011/12/14 : CIA-RDP80T00246A064200070001-1

ghtness. Check the oxygen system charging by the oxygen indi-
The oxygen pressure should be 8÷10 kg./cm.^{2}

2. Checking of Electrical Equipment

heck the aircraft storage batteries and external power supply
s in turn. It is allowed to check all the inverters and A.C.
ters automatic control units both from the aircraft and
al power supply sources.

hen checking the aircraft power supply sources, the radio
or must:

a) Check the condition and voltage of the aircraft storage
ries in the following sequence:

visually inspect the aircraft storage batteries for freedom from
s and for proper connection to the aircraft electrical system;

make sure that all the power consumers are switched on;

set the "EXT.PWR. -AIRCRAFT SYSTEM" selector switch in the
IRFT SYSTEM" position.

heck the aircraft storage batteries voltage with load applied.
y the required load, switch on the NO-750 inverter.

heck the voltage of the aircraft electrical system supplied from
torage batteries by the D.C. electrical system voltmeter with
oltmeter selector switch set in the "RIGHT GENERATORS JUNCTION
osition; check the voltage of the storage batteries groups by
teries voltmeter.

OTE: If the batteries are not properly charged (voltage is
less than 24 V) demand that the batteries be replaced.

b) By the batteries voltmeters check that the power is supplied
emergency bus-bar; to do this:

set the batteries voltmeter selector switch in the "EMERGENCY
" position;

Declassified in Part - Sanitized Copy Approved for Release 2011/12/14 : CIA-RDP80T00246A064200070001-1

Declassified in Part - Sanitized Copy Approved for Release 2011/12/14 : CIA-RDP80T00246A064200070001-1

open the "EMERGENCY POWER SUPPLY FROM BATTERIES" switch cover
the switch in "ON" position;
check by the voltmeter that power is supplied to the emergency
the "EMERGENCY POWER SUPPLY FROM BATTERIES" switch is in "OFF"
on and close the cover.
) Check the operation of the ПО-750 and ПТ-500П inverters
ed from the aircraft storage batteries.
set the "EXT.PWR.-AIRCRAFT SYSTEM" selector switch in the
AFT SYSTEM" position;
set the A.C. aircraft electrical system voltmeter selector switch
"BUS-BAR I" position;
switch on the ПО-750 inverter and check by the voltmeter that
power is supplied to the aircraft electrical system;
switch off the ПО-750 inverter;
switch on the main ПТ-500П inverter and check its operation by
by the voltmeter, make sure that with the main АГБ-2 artifi-
rizon on, the inverter ensures its operation;
check the auxiliary ПТ-500П inverter operation in a similar
ith the auxiliary ПТ-500П inverter operating the amber warning
omes on);
switch off the ПТ-500П inverter.

hen checking the external D.C. and A.C. power supply sources
ioapperator must:
check the D.C. voltage; to do this, proceed as follows:
in command to connect the external power supply source to
craft electrical system;
sure that both plugs of the external power supply source
plugs of the two power supply sources) are connected to the
sceptacles for the illumination of the warning lights at the

Declassified in Part - Sanitized Copy Approved for Release 2011/12/14 : CIA-RDP80T00246A064200070001-1

Declassified in Part - Sanitized Copy Approved for Release 2011/12/14 : CIA-RDP80T00246A064200070001-1

...ies and on the radio operator's control panel).

...et the D.C. electrical system voltmeter selector switch in the ...ENERATOR JUNCTION BOX" position;

... the "EXT.PWR.-AIRCRAFT SYSTEM" in the "EXT.PWR." position;

...eck by the D.C. electrical system voltmeter that 28.5 V power ...ed to the aircraft electrical system, and, if the external ...ply source voltage is more or less than 28.5 V., give a command ...e the voltage to the normal value.

...heck the voltage of the A.C. system supplied from the external ...rce as follows:

...e a command to connect the external A.C. power supply source ...craft electrical system;

... the "115 V. EXTERNAL POWER SUPPLY" switch in "ON" position;

...k by the A.C. voltmeter that 115 V power is supplied to the ... and "BUS-BAR II", and if the power sources voltage is ...s than 115 V give a command to regulate the voltage to the ...ue.

...heck the operation of the PO-750 and PT-500 inverters sup- ... the external power supply sources as specified in paragraph "CHECKING THE AIRCRAFT POWER SUPPLY SOURCES", but the "EXT.PWR. ... SYSTEM" selector switch should be in the "EXT.PWR." position ...xternal A.C. power supply source should be disconnected.

... the D.C. aircraft and external power supply sources emergency ... off. To do this, set the "AIRCRAFT AND EXT. PWR. SOURCES ... OVER" switch in the "ON" position and, having made sure ... aircraft electrical system is fully de-energized, set the ... the initial position.

Declassified in Part - Sanitized Copy Approved for Release 2011/12/14 : CIA-RDP80T00246A064200070001-1

Declassified in Part - Sanitized Copy Approved for Release 2011/12/14 : CIA-RDP80T00246A064200070001-1

...ing of Communication Radio Equipment and СПУ-7 Intercommu-
...nication System Energized

...eck the communication radio equipment and СПУ-7 intercommu-
... system supplied from the external power supply source. Check
...ove equipment by energizing from the aircraft power sources
...rmed only in case of emergency.

...n checking the above equipment from the aircraft storage
..., to save the electrical energy, check the minimum number
...s required, the whole equipment should be checked by the crew
...from the external power supply source, or with the engines
...g from the generators.

...n using the ПО-750 inverter as an A.C. power supply source
...lowed to check the radio equipment in turn applying to the
..., a load not exceeding 750 W.

...UTION: Never check the tail gun installation, the window
... panels heating and РБП-3 radar.

... in the aircraft is the СПУ-7 intercommunication system in
...ion with two amplifiers. Amplifier No 1 is used for circuit
...plifier No 2 - for circuit No 2.

... СПУ-7 control box from the radio operater's station
... the "Interoom. - Radio" selector switch in the "Radio"
...tion) provides:

Declassified in Part - Sanitized Copy Approved for Release 2011/12/14 : CIA-RDP80T00246A064200070001-1

Declassified in Part - Sanitized Copy Approved for Release 2011/12/14 : CIA-RDP80T00246A064200070001-1

with the selector switch in the " УКР " ("VHF") position
head set connection to PCHY-4H No.1 radio set output (with the
or switch on the roof panel in the "2-RECEIVER" position -
the output of PCHY-4H No.1 and No.2 radio sets simultaneously)
witching ON PCHY-4H No.1 radio set transmitter by the pedal
h;

with the selector switch in the "СР" ("COMMUN.RADIO") position
head set connection to the РНС receiver output and switching
I РСБ-7Б radio set by the pedal switch;

with the selector switch in the "КР" ("HF") position the head
onnection to the УС-8 receiver output and switching ON the
radio set transmitter by the pedal switch;

with the selector switch in the " ДР " ("VHF2") position -
head set connection to "PCHY-4H" No.2 receiver and switching
CHY-4H" No.2 radio set transmitter by the pedal switch;

with the selector switch in the "РК-1" ("ADF No.1") and "РК-2"
No.2") positions - the head set connection to the output of the
o.1" and "ADF No.2".

Intercommunication by the СПУ-7 is accomplished with the "I.C.S.
ON" selector switch in the "I.C.S." position and the "1-2 CIRCUIT"
" 1 CIRCUIT" position; in this case the receivers hearing is
d in accordance with the positions of the control box selector
h.

The "SIREN-2" radio signals are heard with the selector switch
"УКР " ("VHF-1") or "ДР " ("VHF 2") positions for the "RADIO"
t and in any position of the control box selector switch for the
)" circuit.

Check the СПУ-7 intercommunication system in the following sequ-

- set the СПУ-7 switch on the switch panel in "ON" position";

Declassified in Part - Sanitized Copy Approved for Release 2011/12/14 : CIA-RDP80T00246A064200070001-1

Declassified in Part - Sanitized Copy Approved for Release 2011/12/14 : CIA-RDP80T00246A064200070001-1

he I.C.S. - RADIO" selector switch in the "I.C.S." position;
he " 1-2 CIRCUIT" selector switch in the " 1 CIRCUIT" position;
he communication with all the crew members using the pedal
h and " I.C.S." button.

When checking the communication radio equipment, the radio
or must:

the "EXT. PWR. - AIRCRAFT SYSTEM" selector switch in the proper
ion depending on which power supply sources are used;
he " 1-2 CIRCUIT" selector switch on the CDU-7 I.C.S. cont-
ex in the " 1 CIRCUIT" position;
he "I.C.S. -RADIO" selector switch in the "RADIO" position;
external power supply source is not available switch on the
0 inverter;
the operation of the 1-PC6-70 and PC6-5 radio sets
ccordance with their operation instructions.

r in mind that hearing of zero beating, when calibrating the
itters is ensured by the intercommunication system with the
r switch in the appropriate position. Hear the 1-PC6-70
itter operating at high and low frequencies.

the side tone switch is in the neutral position the receiv-
s not operate.

Declassified in Part - Sanitized Copy Approved for Release 2011/12/14 : CIA-RDP80T00246A064200070001-1

Declassified in Part - Sanitized Copy Approved for Release 2011/12/14 : CIA-RDP80T00246A064200070001-1

II. ENGINE STARTING

The engines are started from an external 28.5 V, 30-35 kW D.C. [illegible] supply source, or from the aircraft storage batteries using the [illegible]ators of the engines started.

I. Engine Starting from External Power Supply Sources

Before starting the engines from the external power supply [illegible]ces the radio operator must prepare the electrical equipment for [illegible] engine starting employing the following procedure:

- make sure that the external power supply source is connected to [illegible] the receptacles(by the warning lights illumination);
- check to see that the A.C. power supply source is disconnected;
- set the "EXT.PWR.-AIRCRAFT SYSTEM" selector switch in the [illegible] PWR." position;
- switch on the ПО-750 inverter;
- connect the СПУ-7 intercommunication system and one РСИУ-4П [illegible] set;
- on the captain's (or flight engineer's) command set the circuit [illegible]ers required for engine starting in "ON" position on the circuit [illegible]ers panel;
- report the captain on the electrical equipment readiness for the [illegible]e starting.

CAUTION: Never start the engines from the external power supply sources if the aircraft electrical equipment bus failed and not all the storage batteries are installed.

During the engine starting check the electrical equipment [illegible]tion by the instruments:

Declassified in Part - Sanitized Copy Approved for Release 2011/12/14 : CIA-RDP80T00246A064200070001-1

Declassified in Part - Sanitized Copy Approved for Release 2011/12/14 : CIA-RDP80T00246A064200070001-1

check the voltage change by the aircraft D.C. circuit voltmeter
ould the voltage decrease below 16 V give a command to stop the start-

UTION: If the aircraft electrical system is fully de-energized (short-circuit, power failure etc.) change for supply from the emergency bus-bar on the captain's (or flight engineer's) command.

OTE: When starting, check the currents consumed by the starters by the A-3 starters ammeter and fix the starters disbalance current between the 40-th and 50-th sec. of the starting cycle;
the disbalance current should not exceed 105 A when starting the engines from the external power supply sources and 60A when starting the engines from the aircraft storage batteries.
If the disbalance current exceeds 105 A and 60 A respectively the starting system is considered disbalanced and requires special adjustment.

er starting all the engines the radio operator must:
prior to switching on the CTT-12TM generator adjust their to 28.5 V, to do this, set the aircraft D.C. circuit voltmeter switch in a position corresponding to the generator selected stment and turning the BC remote trim resistor knob to the to the right, set a voltage of 28.5 V.
[illegible] all the D.C. generators to the aircraft electrical

[illegible] the "[illegible] AIRCRAFT SYSTEM" selector switch in the [illegible] to the captain: "CHANGED FOR THE [illegible] THE GENERATORS ARE ON".

Declassified in Part - Sanitized Copy Approved for Release 2011/12/14 : CIA-RDP80T00246A064200070001-1

Declassified in Part - Sanitized Copy Approved for Release 2011/12/14 : CIA-RDP80T00246A064200070001-1

d) adjust the CTO-12 A.C. generators voltage; to do this, set selector switch of the generator to be adjusted in the "CHECK" tion, change the aircraft A.C. circuit voltmeter for the bus-bar the CTO-12 generator to be adjusted and by turning the BC-33 remote resistor knob to the left or to the right set a voltage of 115 V. TO -12 A.C. generators Nos. 1 and 2 ensure the propellers and ers heating system operation, CTO-12 generator No.4 operates for bar I, CTO-12 generator No.3 - for bus-bar II. Generator No.1 is as auxiliary one for generator No.4, generator No.2 - as auxili- one for generator No.3.

f CTO-12 generators Nos.1 and 2 fail, with the propellers and ers heating system on, generators Nos.3 and 4 ensure the equip- operation from their bus-bars and the operation of the propellers spinners heating system. The generators are switched over automa- ly.

As the communication radio equipment is supplied with 115 V.A.C. nt from bus-bar I, with engines No.1 and 4 inoperative (or with 2No.1 and CTO-12No.4 failed), use the MO-750 inverter.

The frequency meter indicates normal readings (about 400±10c.p.s.) -96% engine speed.

e) After adjusting the A.C. voltage switch on the A.C. generators.

f) Switch on the main MT-500M inverter.

g) Switch on the communication radio equipment on the radio tor's position.

h) Set the "RADIO EQUIPMENT" and "NAVIGATIONAL EQUIPMENT" circuit kers on the circuit breakers panel, in "ON" position.

i) Adjust the CT-12M generators (even and odd) parallel opera-

The current disbalance of the generators operating in parallel

Declassified in Part - Sanitized Copy Approved for Release 2011/12/14 : CIA-RDP80T00246A064200070001-1

Declassified in Part - Sanitized Copy Approved for Release 2011/12/14 : CIA-RDP80T00246A064200070001-1

ould not exceed 40 A with a 400 A load applied to the generators.

When adjusting the generators parallel operation, decrease the load the more loaded generator by turning the BC-256 trim resistor knob o the left, simultaneously check the aircraft electrical system volt-e.

After switching on all the power consumers, except the tail unit eating system, a load on each odd generator is about 25 A. With the ail unit heating system on, a load on each generator of both the bus-bars is 180-200 A.

j) Report the captain on readiness for flight.

2. Engines Starting from Storage Batteries Using the Generators of Engines Started

The radio operator must:

a) before starting one of the engines:

- set the "EXT.PWR.-AIRCRAFT SYSTEM" switch in the "AIRCRAFT SYS-EM" position;

- set the batteries voltmeter selector switch in the "BATTERIES, ROUP II" position;

- set the aircraft D.C. voltmeter selector switch in the "RIGHT ENERATORS JUNCTION BOX" position;

- switch on the ПО-750 and ПО-500Д inverter and one РСМУ-4П radio (if it is equired during starting);

d) during starting check the aircraft electrical system voltage he D.C. voltmeter, and the voltage of the storage batteries, group the batteries voltmeter;

- in case the electrical system voltage decreases below 10 V rep the crew member starting the engine;

voltage has dropped, stop starting.

Declassified in Part - Sanitized Copy Approved for Release 2011/12/14 : CIA-RDP80T00246A064200070001-1

Declassified in Part - Sanitized Copy Approved for Release 2011/12/14 : CIA-RDP80T00246A064200070001-1

CAUTION: If during starting the aircraft electrical system happens to be de-energized, change for supply from the emergency bus-bar on the captain's (or flight engineer's) command.

c) after the engine obtains 95-96% speed adjust the voltage of the given engine GTT-12TM generators to 28.5 V and switch on these generators to the aircraft electrical system.

Make a 4-2 minutes' interval between the engines startings, check the charging current of the storage batteries by their ammeter.

Start the next engine when the charging current decreases to 75-100 A. When starting the next engine, set the rating of the engines started corresponding to 20° by the UIPT-2 fuel control lever position indicator, to avoid the generators overheating.

While starting the rest of the engines, adjust the voltage and switch on the generators of the engines started to the aircraft electrical system.

The peak load on the generators of the engines started reaches 500 A and more, then it decreases to 400-250A(depending on the number of the generators started).

During this time the radio-operator must check that both the right and left generators are used for starting.

d) Switch on the A.C. generators and the whole radio equipment of the aircraft as specified for the engine starting from the external power supply source.

LII. RADIO OPERATOR'S FLIGHT INSTRUCTIONS

In flight the radio operator must:

maintain communication in accordance with the flight communication

Declassified in Part - Sanitized Copy Approved for Release 2011/12/14 : CIA-RDP80T00246A064200070001-1

Declassified in Part - Sanitized Copy Approved for Release 2011/12/14 : CIA-RDP80T00246A064200070001-1

- 30 min. after starting the engines check finally and adjust the D.C. and A.C. generators voltage. Adjust the parallel operation of the СП-12ТМ generators and further adjust the parallel operation if the current disbalance of the generators operating in parallel exceeds 40 A;

- during the entire flight check the aircraft electrical equipment operation by the instruments and check the radio equipment operation;

- report to the captain on troubles and take measures to remedy them.

I. ABNORMAL OPERATION IN FLIGHT

In abnormal conditions of flight the radio operator must act on the command or permission of the captain.

The radio operator must:

a) Immediately report to the captain on all the the troubles in the equipment operation.

b) Should one of the operating D.C. generators fail, which is indicated by drop or increase in the aircraft electrical system voltage and by increase or decrease in the load current, switch off this generator.

c) If one of the СГО-12 A.C. generators fails (or the engine stops) the red light of the failed generator (or the generator of the engine stopped) comes on.

Instead of the generators failed the auxiliary СГО-12 generators are switched on irrespective of the failed generators toggle switches position.

d) If the operating A.C. generators do not ensure the radio equipment operation change for supply from the ПО-750 inverter by the captain's permission.

Declassified in Part - Sanitized Copy Approved for Release 2011/12/14 : CIA-RDP80T00246A064200070001-1

Declassified in Part - Sanitized Copy Approved for Release 2011/12/14 : CIA-RDP80T00246A064200070001-1

a) In case of fire in one of the engines or in the wing, switch off the generators to which the fire can spread. In case of belly landing (with the L.G.up) switch off all the power supply sources before touch-down and go to the cargo attendents' cabin. After landing make sure that the aircraft electrical system is de- energized.

If the radio equipment is supplied from the ПО-750 inverter it is allowed to switch on simultaneously the following A.C. consumers: РТИС-1,2- 51 fuel flowmeters, АРК-5 automatic direction finder, РСИУ -4П No.1 radio set and СРО-1 IFF.

c) If the L.C. power distribution system is damaged, or all the D.C. generators fail, first change for supply from the emergency bus-bar and after that switch off the СТГ-12СТ generators.

Bear in mind that in this case all the A.C. generators are switched off, and therefore change for A.C. supply from the ПО-750 inverter.

g) With the "I.C.S. FAILURE" light on, check and the communication with the gunner using the intercommunication system by circuit No.2.

V. RADIO OPERATOR'S AFTER FLIGHT INSTRUCTION

After taxying to the parking place, on the captain's command the radio operator must:

- switch off all the radio equipment on his station;
- switch off the ПТ-500Б inverter;
- switch off all the D.C. and A.C. generators.

CAUTION! Hold the "BAT.PWR.-AIRCRAFT SYSTEM" selector switch in the "AIRCRAFT SYSTEM" position until all the engines are fully stopped.

- After stopping all the engines switch off the circuit breakers on the circuit breakers panel and de-energize the aircraft electrical system;
- report the captain on all the troubles detected and on the radio and electrical equipment operation in flight.

Declassified in Part - Sanitized Copy Approved for Release 2011/12/14 : CIA-RDP80T00246A064200070001-1

Declassified in Part - Sanitized Copy Approved for Release 2011/12/14 : CIA-RDP80T00246A064200070001-1

D. GUNNER'S OPERATING INSTRUCTIONS

I. Pre-Flight Inspection

When checking the equipment with the aircraft electrical system de-energized, the gunner must:

1. Ensure that the gun covers and the "GAMMA-54T" range-finder radar antenna cap are removed, the doors of tail gun installation fairing are closed, the ammunition belt feed openings are closed, the gunner's cabin ventilation air scoop is opened and the emergency escape door latch is fastened.

2. Check the ammunition boxes for presence of cartridges, ensure that the ammunition boxes are covered with covers and the ammunition booster assemblies are set in operating position.

3. Ensure that the units of the "GAMMA-54T" radar are free from mechanical damages.

4. Ensure that there are no foreign objects in the tail cabin and the units of the MB-23Y system, cabin air system and oxygen equipment as well as other instruments are not damaged.

5. Check the pressure in the emergency escape door opening system (the pressure should be about 150 atm.).

6. Check the high pressure in the gun recharging pneumatic system (it should be about 150 atm.).

Check the low pressure in the gun recharging pneumatic system (it should be 65±3 atm.).

7. Check the oxygen pressure (with the KB-54 valve opened it should be equal to 8-11 atm.) and ensure the KH-24M oxygen regulator is serviceable.

8. Check the fuses in the tail cabin junction box for presence and serviceability.

Declassified in Part - Sanitized Copy Approved for Release 2011/12/14 : CIA-RDP80T00246A064200070001-1

Declassified in Part - Sanitized Copy Approved for Release 2011/12/14 : CIA-RDP80T00246A064200070001-1

9. Check the switches on the КЭП-4 ammunition booster assembly box and КУК-54 tail gun installation control box (they should be ON).

10. Unlock the sighting station and ensure that it moves freely both in vertical and horizontal directions. If necessary adjust the friction brakes.

11. Preset a temperature about 16°C (or any other) on the TP1BK-75M thermostat.

When checking the equipment energized, the gunner must:

1. Check the aircraft electrical system voltage by the appropriate voltmeters. The D.C. voltage should be equal to 28.5 V, A.C. voltage - 115 V.

2. Check the intercommunication system by setting communication with the other crew members and check the main intercommunication system failure warning lights for functioning.

WARNING: Check the tail gun installation and "GAMMA-54T" range-finder radar only with the external power supply source ON or with engines operative by the captain's permission only.

3. Turn ON all the switches on the BU-54T auxiliary switch panel.

4. Using the button on the КЭП-4 ammunition booster assembly box ensure that the ammunition booster assemblies are ON.

5. Check the "GAMMA-54T" range-finder radar for functioning. (about 2 sec. after the "A.C.", "UNIT", "GAMMA" and "TRANSMITTER" switches on the BU-54T auxiliary switch panel are switched ON, the "GAMMA" light on the BU-54T auxiliary switch panel and "TARGET LOCK" and "RIFT" lights on the КПС-53А sighting station should come on).

6. Set the "COMPUTER" switch on the КПС-53А sighting station in ON position and press the "TEST" button on the BU-54T auxiliary switch panel. In this case the light should come on, that testifies to the serviceability of the БВ-257-1 computer unit.

Declassified in Part - Sanitized Copy Approved for Release 2011/12/14 : CIA-RDP80T00246A064200070001-1

Declassified in Part - Sanitized Copy Approved for Release 2011/12/14 : CIA-RDP80T00246A064200070001-1

7. Using the sight reticle rheostat obtain necessary brighness of the centre mark and range circle and check the external base range finder operation; to do this, set the base of 15-22 m. on the КПС-53А sighting station and turn the range knob (in this case the diamonds move to the centre mark or apart from it).

8. Press the control lever and check the synchronization of turrent and sight motion by turning the sighting station to the right, left, up and down in succession.

9. Check the actuation of the gun limit switches, to do this, turning the sighting station move the turret to each of the stops and ensure that the turret rests against it.

10. Check the gun stowage position circuit; to do this, using the sighting station turn the turret in any position and release the control lever; the turret should return to its initial position.

11. Check the ПАУ-457 camera gun and firing circuit for operation; to do this, press the firing button; in this case, the camera gun motor should operate.

12. To check the recharging circuits when the guns are not charged, recharge each gun in succession by pressing the "RECHARGE" button on the ОЦ-54Т main switch panel.

Switch OFF all the switches on the ВЦ-54Т auxiliary switch panel.

13. After the engines are started on the captain's command open and close the emergency escape door using the "EMERG.ESCAPE DOOR OPEN-CLOSED" selector switch.

WARNING: Do not use the pneumatic system to open the escape door.

14. Report the captain that the cabin equipment is serviceable.

Declassified in Part - Sanitized Copy Approved for Release 2011/12/14 : CIA-RDP80T00246A064200070001-1

Declassified in Part - Sanitized Copy Approved for Release 2011/12/14 : CIA-RDP80T00246A064200070001-1

II. PREPARING FOR TAKE-OFF

Prior to take-off the gunner must:

1. Place the parachute into the seat bucket.

2. Lock the entrance door.

3. Connect the lanyard spring hook of the КАП-3 time release mechanism flexible pin to the adapter ring located in the pocket on the seat bucket.

4. Sit on the parachute and fasten the harness.

5. Connect the hose of the oxygen mask to the hose of the КАП-23 oxygen regulator, open the oxygen supply valve, fasten the safety belts and report the captain on readines for take-off.

III. CLIMB. LEVEL FLIGHT

After take-off the gunner must:

1. Turn on the "EMERG. ESCAPE DOOR", "AMBIENT AIR TEMPERATURE", "ТРТВК-45М TERMOSTAT" and all the other necessary circuit breakers on the gunner's circuit breakers panel.

2. Set the "NORMAL-COMBAT" switch in the "NORMAL" position.

3. On the captain's command set the pressure sealing system control valve to the "PRESSURE SEALING" position and check the pressure in the inflating strip seal (it should be 3±0.5 kg./dm.^{2}).

4. Ensure that the cabin ventilating control valve is closed.

5. Using the cabin pressurization control valve adjust the air consumption so that УРКВ indicator indicates 5-6 units.

6. Turn all the switches on the ВП-54Т auxiliary switch panel to "ON" position the "COMPUTER" toggle switch on the КПС-53А flighting station should be ON.

7. When climbing check the cabin altitude, differential pressure and air consumption by the appropriate instruments.

Declassified in Part - Sanitized Copy Approved for Release 2011/12/14 : CIA-RDP80T00246A064200070001-1

Declassified in Part - Sanitized Copy Approved for Release 2011/12/14 : CIA-RDP80T00246A064200070001-1

8. At an altitude of 2000 m. put on the oxygen mask.

9. To prepare the AM-23 guns for firing recharge them just before firing only.

WARNING: Take into account that the "CAMMA-54T" range-finder actuates falsely due to the ground effect up to an altitude of 2200 m., therefore at low altitudes introduce the target distance manually from the external base range-finder.

10. When cabin air temperature reaches the values preset on the TPTBK-45M thermostat, set the three-way selector switch in the "AUTOMATIC" position. If the cabin temperature is not maintained constant automatically, adjust it manually.

11. All through the flight check the cabin instruments and units. If they are found faulty report the captain immediately and take measures to remove them.

Descent and Landing

Prior to landing the gunner must:

1. De-compress the cabin; at an altitude of 1500 m. close the cabin pressurization control valve and, if necessary, open the cabin ventilation valve.

2. Set the guns in the extreme upper position and, without releasing the control lever, turn all the switches on the BH-54T auxiliary switch panel and fire control toggle switches on the OH-54T main switch panel to "OFF" position.

NOTE: In training flight proceed as specified in step 8 after firing is completed.

3. Ensure that the safety belts are fastened.

After landing and taxiing to parking place the gunner must:

Declassified in Part - Sanitized Copy Approved for Release 2011/12/14 : CIA-RDP80T00246A064200070001-1

Declassified in Part - Sanitized Copy Approved for Release 2011/12/14 : CIA-RDP80T00246A064200070001-1

1. Switch OFF all the circuit breakers.

2. Close the valve of the КП-24М oxygen regulator and discharge the oxygen from the low pressure system.

3. Report the captain and flight engineer on defects detected in flight.

V. ABNORMAL OPERATION IN FLIGHT

In abnormal flight conditions the gunner must report the captain on his actions.

1. If smell of burning or smoke penetrates into the cabin through the cabin pressurization system, close the cabin pressurization valve, set the oxygen diluter valve on the КП-24М oxygen regulator in the "100% OXYGEN" position, de-compress the cabin.

2. In case of fire inside the cabin proceed as specified in [illegible] 1. If necessary, use the fire extinguisher.

3. If the cabin differential pressure exceeds 0.4, set the "NORMAL COMBAT" selector switch in "COMBAT" position. If the pressure still rises, de-compress the cabin.

4. In case of dangerous decreasing of the cabin differential pressure, increase the air consumption, if it does not help de-compress the cabin.

5. If the pressure gauge reads no pressure in the inflating strip [illegible] check the cabin sealing by cabin altitude and differential pressure [illegible] the normal readings of the instruments testify that [illegible] sealing system is [illegible] the pressure gauge is [illegible]

[illegible] of gun [illegible] them in the extreme upper [illegible] all the toggle switches on the [illegible] auxiliary [illegible] the firing control toggle switches on the [illegible]

Declassified in Part - Sanitized Copy Approved for Release 2011/12/14 : CIA-RDP80T00246A064200070001-1

Declassified in Part - Sanitized Copy Approved for Release 2011/12/14 : CIA-RDP80T00246A064200070001-1

7. The gunner emergency abandons the aircraft on the captain's command proceeding as follows:

- roll the seat fully forward;

- set the cabin sealing valve in the "UNSEALED" position, close the cabin pressurization valve;

- stand from the seat and turn left till facing the flight direction, step on the escape door edging simultaneously holding the hand hold on the cabin wall;

- recline the seat bucket;

- when the cabin differential pressure is about zero, set the emergency escape door opening toggle switch in the "OPEN" position; if the door would not open, use the pneumatic system emergency valve;

- holding the hands holds on the cabin wall, seat rails and rods of the door opening control cylinders, step on the lower step of the door;

- squating, shrink your body as much as possible, release the hands from the rods and slide down without leaning back;

- if the KAП-3 time release mechanism fails to open the parachute, open it in the usual way by pulling out the rip ring.

If it is impossible to jump through the emergency escape door, or by the captain's command, the gunner can abandon the aircraft through the cargo door or entrance door.

WARNING: Before leaving the cabin the gunner must disconnect the spring hook of the KAП-3 time release mechanisms lanyards from the adapter ring, otherwise the parachute will deploy before time.

Declassified in Part - Sanitized Copy Approved for Release 2011/12/14 : CIA-RDP80T00246A064200070001-1

Declassified in Part - Sanitized Copy Approved for Release 2011/12/14 : CIA-RDP80T00246A064200070001-1

C O N T E N T S

		Page
SECTION I.	BRIEF INFORMATION ON AIRCRAFT AND OPERATING LIMITATIONS	
	1. Main performance (under standard conditions)..	3
	2. Aerodynamic design	3
	3. Operating limitations	4
	A. Aircraft	4
	B. Engine	5
SECTION II.	PREPARING THE AIRCRAFT FOR FLIGHT	
	1. Pre-flight inspection of aircraft by captain (pilot)	8
	2. Pre-flight inspection of aircraft by co-pilot	15
	3. Preparing the engines for starting	18
	4. Starting the engines	20
	5. Warming-up, testing and stopping the engines	23
SECTION III.	FLYING THE AIRCRAFT BY DAY UNDER NORMAL WEATHER CONDITIONS	
	1. Preparing the aircraft for taxiing out	28
	2. Taxying	29
	3. Preparation for take-off	31
	4. Take-off	33
	5. Climb, level flight and descent	35
	6. Landing	41
	7. Missed-Approach procedure	43
	8. Crosswind take-off and landing	43
	9. Take-off and landing with C.G. in max. forward and aft limit positions.....	43

Declassified in Part - Sanitized Copy Approved for Release 2011/12/14 : CIA-RDP80T00246A064200070001-1

Declassified in Part - Sanitized Copy Approved for Release 2011/12/14 : CIA-RDP80T00246A064200070001-1

		Page
	10. Landing with flaps retracted.....	46
	11. Take-off and landing on soft surface runways	46
SECTION IV.	FLYING IN ADVERSE WEATHER CONDITIONS	47
SECTION V.	NIGHT FLYING	50
SECTION VI.	ABNORMAL AND EMERGENCY OPERATION	
	1. Symptoms of engine failure	54
	2. Engine failure during take-off run	55
	3. Engine failure at take-off after aircraft comes clear of the ground and landing with three engines running....	55
	4. Missed approach procedure with three engines running	57
	5. Stopping engine in flight	58
	6. Engine flight re-start	59
	7. Engine failure in flight	60
	8. Failure of two engines located on one half wing	62
	9. Flying with outboard engine propeller windmilling	66
	10. Controlling aircraft at large angles of attack	69
	11. Flying with tail emergency escape door opened	75
	12. Landing with L.G. defective	76
	13. Barometric instruments failure	77
	14. Crew actions in flight in case of cabin air system failure	79

Declassified in Part - Sanitized Copy Approved for Release 2011/12/14 : CIA-RDP80T00246A064200070001-1

Declassified in Part - Sanitized Copy Approved for Release 2011/12/14 : CIA-RDP80T00246A064200070001-1

		Page
	15. Fire in flight	80
	16. Emergency bailing-out	83
SECTION VII.	AIRCRAFT HYDRAULIC SYSTEM	
	1. L.G. extension and retraction	86
	2. L.G. wheels brake system	94
	3. Nose L.G. wheels steering when taxying	97
	4. Flaps control	98
	5. Emergency escape door control	100
	6. Bomb bays door control	102
	7. Cargo doors control	105
	8. Fuel supply switching over to hand pump supply system	108
	9. Gunner's cabin emergency escape door control	109
SECTION VIII.	NOSE WHEEL STEERING SYSTEM OPERATED BY RUDDER PEDALS	111
SECTION IX.	FUEL SYSTEM	
	1. Checking the [illegible] fuel contents gauge system prior to flight	113
	2. Fuel consumption control in flight	116
SECTION X.	FIRE-EXTINGUISHING SYSTEM	118
SECTION XI.	AU-28Ш AUTOPILOT OPERATION	122
	1. Checking the AU-28Ш autopilot before flight	122
	2. Flying with the AU-28Ш autopilot	123
SECTION XII.	CHECK OF AIRCRAFT OXYGEN EQUIPMENT	
	1. Pre-flight check of oxygen equipment	130

Declassified in Part - Sanitized Copy Approved for Release 2011/12/14 : CIA-RDP80T00246A064200070001-1

Declassified in Part - Sanitized Copy Approved for Release 2011/12/14 : CIA-RDP80T00246A064200070001-1

		Page
	2. Oxygen system operation in flight.....	132
	3. Checking operation of oxygen equipment in cargo compartment	133
	4. Calculating oxygen reserve for a flight	134
SECTION XIII.	CABIN AIR SYSTEM	136
	1. Before starting the engines	136
	2. After starting the engines	136
	3. In flight	138
SECTION XIV.	AIRCRAFT DE-ICING SYSTEM	
	1. Pre-flight procedure	140
	2. At take-off	142
	3. In flight	142
	4. Abnormal and emergency operation	143
SECTION XV.	CREW MEMBERS' OPERATING INSTRUCTIONS	
	A. Navigator's operating instructions	144
	B. Flight engineer's operating instructions..	151
	C. Radio operator's operating instructions..	161
	D. Gunner's operating instructions	175

Declassified in Part - Sanitized Copy Approved for Release 2011/12/14 : CIA-RDP80T00246A064200070001-1

Declassified in Part - Sanitized Copy Approved for Release 2011/12/14 : CIA-RDP80T00246A064200070001-1

50X1-HUM

1

ELECTRIC ACTUATOR

Model MKA-3A

D E S C R I P T I O N .

Declassified in Part - Sanitized Copy Approved for Release 2011/12/14 : CIA-RDP80T00246A064200070001-1

Declassified in Part - Sanitized Copy Approved for Release 2011/12/14 : CIA-RDP80T00246A064200070001-1

3A

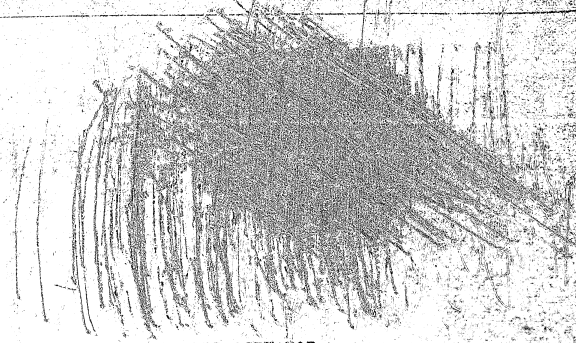

ELECTRIC ACTUATOR

Model MKA-3A

DESCRIPTION

Declassified in Part - Sanitized Copy Approved for Release 2011/12/14 : CIA-RDP80T00246A064200070001-1

Declassified in Part - Sanitized Copy Approved for Release 2011/12/14 : CIA-RDP80T00246A064200070001-1

I. GENERAL

The MKA-3A electric actuator is used for energizing the windings of the contactors incorporated in the aircraft de-icing system.

The electric actuator is mounted inside the fuselage and attached by its reduction gear support with four bolts.

The electric actuator is designed for operation in aircraft equipped with a single-wire electrical power supply system.

The electric actuator is controlled by a switch mounted in the cockpit.

II. TECHNICAL DATA

1. Nominal voltage - 27 V
2. Operating voltage range - 27 V ± 10%
3. No load current cut-out by contacts - 5 A (inductive load).
4. Nominal current - not more than 0.8 A
5. The control assembly energizes the contactor windings in the following programmed cycles:
   a) two switchings-on of 0.4±0.1 sec. duration with an interval of not more than 4 sec.
   b) switching-on of 40 ± 6 sec. duration with an interval between switchings) of not more than 4 sec.
   c) switching-on of 4±1 sec. duration with an interval (between switchings) of not more than 4 sec.

   Note: Time of intervals between switchings is included in the contacts closing period indicated above. Two contacts of the cycle can not be closed simultaneously.
6. Duty - continuous.
7. The electric actuator reliably operates under the following conditions:

Declassified in Part - Sanitized Copy Approved for Release 2011/12/14 : CIA-RDP80T00246A064200070001-1

Declassified in Part - Sanitized Copy Approved for Release 2011/12/14 : CIA-RDP80T00246A064200070001-1

a) ambient air relative humidity up to 98%

b) ambient temperature change from +50°C to -60°C

c) vibration at 4 g.

d) altitude of 20,000 m. above S.L.

8. Actuator service life - 300 hours of continuous operation at 5 A load (inductive) on each contact of the contacts assembly.

III. PRINCIPLE OF OPERATION

The MKA-3A electric actuator provides 3-cycles operation:

a) 6 pulses of 20 sec. duration each

b) 3 pulses of 40 sec. duration each

c) 2 pulses of 60 sec. duration each.

The electric motor outlet shaft gear transmits rotation to a four-stage planetary-type reduction gear.

Fixed on the reduction gear fourth stage is a cam with three lobes. The rotating cam lobes press the spring contacts [illegible] and the contacts are closed in the definite sequence supplying pulse voltage signals (through the plug connector) to the [illegible] system contactors windings.

Declassified in Part - Sanitized Copy Approved for Release 2011/12/14 : CIA-RDP80T00246A064200070001-1

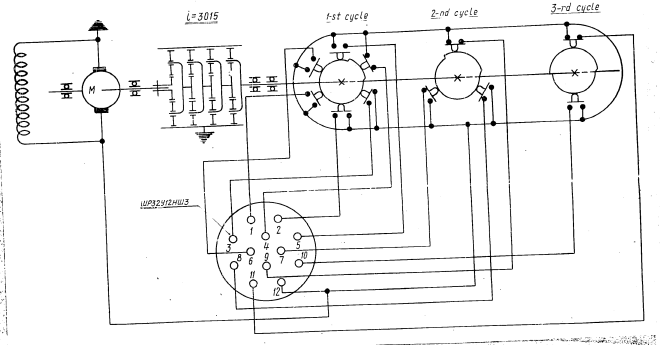

Fig. 1. MKA-3A Electro-Mechanical Diagram

M – electric motor, 1,500 r.p.m.
1,2,3,4,5,6 – I-st cycle contacts
7,8,9 – II-nd cycle contacts
10, 11 – III-rd cycle contacts
12 – common (+).

Declassified in Part - Sanitized Copy Approved for Release 2011/12/14 : CIA-RDP80T00246A042000700001-1

Declassified in Part - Sanitized Copy Approved for Release 2011/12/14 : CIA-RDP80T00246A064200070001-1

IV. D E S I G N

The MKA-3A electric actuator consists of the following main elements:

a) electric motor

b) reduction gear

c) contacts assembly

d) plug connector BP-82V12HE3

Key to Fig.2.

1. Plug connector
2. Electric motor casing
3. Stator
4. Field coil
5. Shaft
6. Pin
7. Gear
8. Armature laminations with winding
9. Commutator
10. Bearing
11. Brushes
12. Brush holder
13. Reduction gear
14. Gear train
15. Shaft
16. Planetary gears
17. Pin
18. Stationary gear
19. Bearing
20. Contacts assembly casing
21. Panel
22. Spring contact
23. Fixed contact
24. Key
25. Cam

Declassified in Part - Sanitized Copy Approved for Release 2011/12/14 : CIA-RDP80T00246A064200070001-1

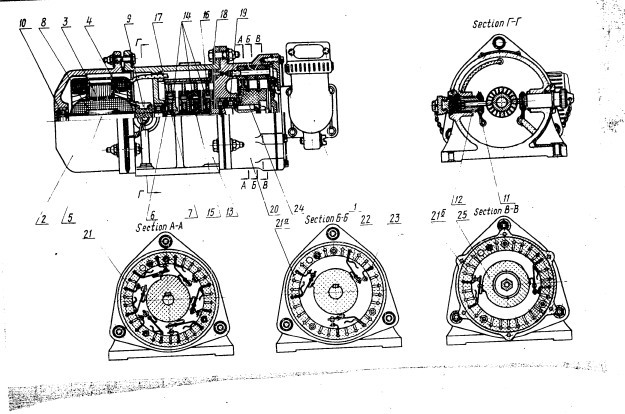

Fig.2. Electric Actuator General View

Declassified in Part - Sanitized Copy Approved for Release 2011/12/14 : CIA-RDP80T00246A042000700001-1

Declassified in Part - Sanitized Copy Approved for Release 2011/12/14 : CIA-RDP80T00246A064200070001-1

Electric motor - shunt, two-pole, with field coils connected in series. The electric motor is energized via a plug connector.

Mounted inside the casing (2) is the stator (3) made as a unit with pole pieces and assembled of 0.5-mm. steel laminations.

The stator pole pieces are fitted with the field coils (4).

The electric motor armature consists of the shaft (5) on the outlet end of which the gear (7) is fixed by the pin (6), the armature laminations with winding (8) and the commutator (9). The ends of the armature winding coils are soldered into grooves in the risers of the commutator.

The armature shaft is supported by two ball-bearings (10).

The brushes (11) are held in the brush holders (12) inserted in the casing (2). The electric motor casing is made of magnesium alloy and attached to the reduction gear casing by three bolts with self-locking nuts.

Reduction gear (13) of the MKA-3A electric actuator consists of four planetary gears (14) mounted on the shaft (15); total gear ratio being 3015. The electric motor gear (7) transmits the electric motor shaft rotation to the planetary gears (16).

The planetary gears supported by brass-graphite bushings rotate on the pins (17) of their support.

The planetary gears meshing with the stationary gear (18) transmit rotation to the following stage of the reduction gear.

The reduction gear outlet shaft carried on two bearings (19) is attached in the contacts assembly casing (20).

Contacts assembly. Mounted in the casing (20) are three panels (21) carrying the spring contacts (22) and fixed contacts (23) whose number correspond to the actuator operating cycles.

Declassified in Part - Sanitized Copy Approved for Release 2011/12/14 : CIA-RDP80T00246A064200070001-1

Declassified in Part - Sanitized Copy Approved for Release 2011/12/14 : CIA-RDP80T00246A064200070001-1

Keyed (by the key 24) on the reduction gear outlet shaft is the cam (25) with three lobes. The rotating cam (25) lobes press the spring contacts lugs and close the contactors power supply circuits.

With further rotation of the cam, the spring contact lug is released and the circuit is opened.

Plug connector. The electric actuator is fitted with a MP32V12HW3 plug connector mounted on the actuator cover.

V. MOUNTING AND OPERATING THE ACTUATOR

1. The actuator is attached to the aircraft structure by four bolts through the reduction gear support and may be installed in any position.

2. In operation, replace the brushes worn to 17 mm. long or damaged with new brushes taken from a spare parts set. After replacing the brushes closely fit them to the commutator.

Declassified in Part - Sanitized Copy Approved for Release 2011/12/14 : CIA-RDP80T00246A064200070001-1

Declassified in Part - Sanitized Copy Approved for Release 2011/12/14 : CIA-RDP80T00246A064200070001-1

PRESSURIZED CABIN AIR TEMPERATURE REGULATOR

(TRTBK-45M THERMOSTAT AND PII-2 RELAY UNIT)

Declassified in Part - Sanitized Copy Approved for Release 2011/12/14 : CIA-RDP80T00246A064200070001-1

Declassified in Part - Sanitized Copy Approved for Release 2011/12/14 : CIA-RDP80T00246A064200070001-1

PRESSURIZED CABIN AIR TEMPERATURE REGULATOR

(TPTBK-45M THERMOSTAT AND PH-2 RELAY UNIT)

Declassified in Part - Sanitized Copy Approved for Release 2011/12/14 : CIA-RDP80T00246A064200070001-1

Declassified in Part - Sanitized Copy Approved for Release 2011/12/14 : CIA-RDP80T00246A064200070001-1

PRESSURIZED CABIN AIR TEMPERATURE REGULATOR

(TPTPK-45 THERMOSTAT AND PR-2 RELAY UNIT)

DESCRIPTION, INSTALLATION AND OPERATION INSTRUCTIONS

Declassified in Part - Sanitized Copy Approved for Release 2011/12/14 : CIA-RDP80T00246A064200070001-1

Declassified in Part - Sanitized Copy Approved for Release 2011/12/14 : CIA-RDP80T00246A064200070001-1

C O N T E N T S

Page

I. Purpose .....

II. Technical Data .....

III. Design .....

IV. Operation .....

V. Installation and Operation Instructions .....

VI. Service Troubles and Remedies .....

Declassified in Part - Sanitized Copy Approved for Release 2011/12/14 : CIA-RDP80T00246A064200070001-1

Declassified in Part - Sanitized Copy Approved for Release 2011/12/14 : CIA-RDP80T00246A064200070001-1

I. PURPOSE

The air temperature regulator is designed for automatic maintaining air temperature in the aircraft pressurized cabin.

The general views of the TPTBK-45M thermostat and PM-2 relay unit are given in Figs. 1 and 2.

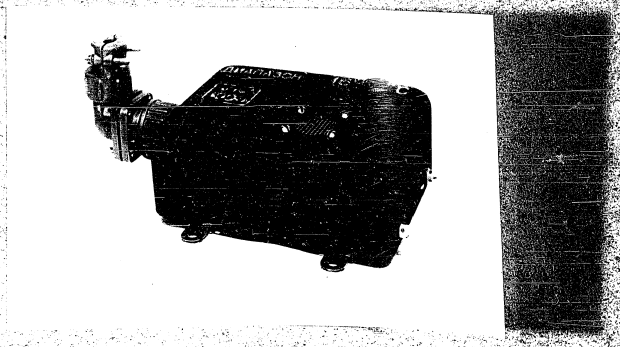

Fig.1. TPTBK-45M Thermostat General View

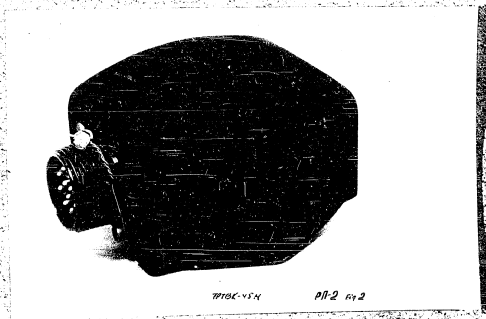

Fig.2. PM-2 Relay Unit General View

Declassified in Part - Sanitized Copy Approved for Release 2011/12/14 : CIA-RDP80T00246A064200070001-1

Declassified in Part - Sanitized Copy Approved for Release 2011/12/14 : CIA-RDP80T00246A064200070001-1

II. TECHNICAL DATA

Thermostat

Regulated temperature range	from 16°C to 26°C or from 10°C to 20°C.
D.C. voltage	27 ± 2.7 V
Insensitivity zone	+ 1.5°
Calibration error	±2.5°C
Thermostat service life	1000 flying hours
Weight	not more than 390 gr.

PR-2 Relay Unit

Pickup voltage	not more than 18 V
Dropout voltage	not more than 5 V
Number of switchings	15000
Current drawn by relay coil	not more than 0.17 a
PR-2 relay unit service life	1000 flying hours
Weight	not more than 290 gr.

III. DESIGN

The air temperature regulator consists of TPTBK-45M thermostat, PR-2 relay unit and of one or two actuating mechanisms.

The thermostat is a master and control element of the regulator which via the relay unit controls the actuating mechanisms.

The PR-2 relay unit is an intermediate link between the thermostat and actuating mechanisms and also protects the TPTBK-45M thermostat contacts from burning.

The thermostat contacts control the relay unit. The relay unit contacts, in their turn, control the actuating mechanisms including the corresponding field windings of the reversible electric motors.

Declassified in Part - Sanitized Copy Approved for Release 2011/12/14 : CIA-RDP80T00246A064200070001-1

Declassified in Part - Sanitized Copy Approved for Release 2011/12/14 : CIA-RDP80T00246A064200070001-1

OTE: The number and type of the actuating mechanisms are determined by the air temperature control system assumed for the aircraft cabin.

Thermostat Model TPTBK-45

The design of the TPTBK-45 thermostat is given in Fig.3. The thermostat is a tetrahedral box covered with the housing (Fig.3).

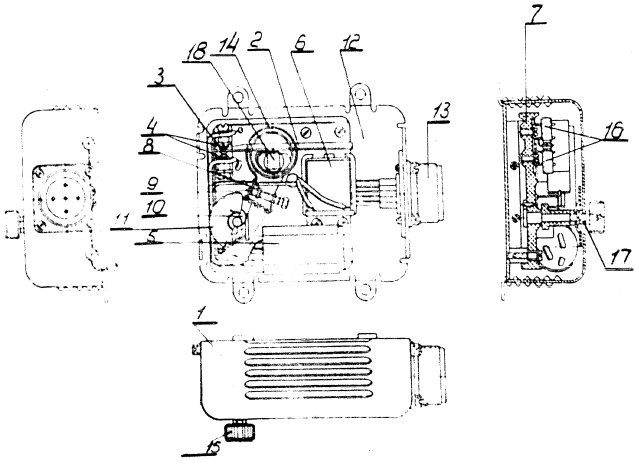

TPTBK-45M Fig.3

Fig.3. TPTBK-45 Thermostat Design

1 - Housing; 2 - armature; 3 - armature contact; 4 - fixed contacts; 5 - spark-quench unit; 6 - feedback electromagnet; 7 - panel; 8 - lever; 9 - adjusting screw; 10 - dam; 11 - scale; 12 - base; 13 - plug connector; 14 - bimetal spiral; 15 - knob; 16 - contacts adjusting screws; 17 - shaft; 18 - support.

Declassified in Part - Sanitized Copy Approved for Release 2011/12/14 : CIA-RDP80T00246A064200070001-1

Declassified in Part - Sanitized Copy Approved for Release 2011/12/14 : CIA-RDP80T00246A064200070001-1

There is an inspection window in the housing to observe the scale (14) of the thermostat. The thermostat scale is turned by means of the knob (15).

For a better air access into the box there are louvers on the three sides of the housing.

The thermostat is connected to the regulator circuit through the five-pin plug connector (13). All the thermostat elements are mounted on a carbolit panel (7) attached to the metal base (12) by three screws.

The receptacle of the plug connector (13) is fastened to the front side of the base by four screws. The base has special lugs for the thermostat installation in the aircraft and for the housing attachment to the base.

Attached to the carbolit panel (7) is the support (18) of the bimetal spiral (14) with the armature (2) which is welded together with the spiral and fastened to the support (18) by means of an angle and two screws. One end of the armature (2) ends in a spherical contact (3) located between two fixed contacts (4).

The gap between the armature contact and fixed contacts is adjusted by the screws (16) attached to the panel by supports.

Another armature end is set close to the feedback electromagnet (6). The electromagnet consists of a wire-wound coil.

There is an iron core inside the coil which comes in contact with the armature end.

The electromagnet coil is fastened to the panel with a clamp used also as magnetic circuit.

The bimetal spiral voltage is adjusted by the screw (9) on the lever (8) which rotates about the screw of the spiral support (18). The other end of the lever contacts the cam (10). The cam shaft (17) is also used as the scale (11) shaft.

Declassified in Part - Sanitized Copy Approved for Release 2011/12/14 : CIA-RDP80T00246A064200070001-1

Declassified in Part - Sanitized Copy Approved for Release 2011/12/14 : CIA-RDP80T00246A064200070001-1

Fixed to the panel (7) in the clamp, is the spark-quench unit (9) enclosed in a metal casing with two mounted electrolytic capacitors and a resistor.

Relay Unit Model РП-2

The design of the РП-2 relay unit is given in Fig.4.

Two relays (2) are mounted on the metal base (1, Fig.4).

The relay unit is enclosed in the housing (3) attached to which is the receptacle of the plug connector (4). The housing is secured by the screw (5) to the support (6).

The relay unit base has two attachment holes (7).

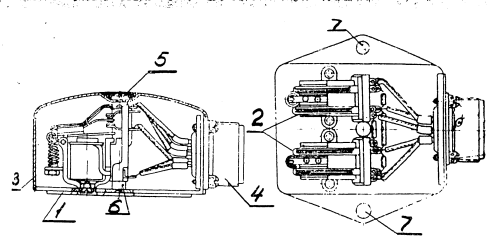

Fig.4. РП-2 Relay Unit Design

1 - Base; 2 - РП-2 relays; 3 - housing; 4 - plug connector; 5 - screw; 6 - support; 7 - hole.

IV. OPERATION

The required air temperature in the aircraft pressurized cabin is set according to the scale (11, Fig.3) by turning the knob (15) in the range of 16°C to 26°C or in the range of 10°C to 20°C.

The principle of the regulator operation is based on the ability of the bimetal plates to deform at ambient air temperature variations.

Declassified in Part - Sanitized Copy Approved for Release 2011/12/14 : CIA-RDP80T00246A064200070001-1

Declassified in Part - Sanitized Copy Approved for Release 2011/12/14 : CIA-RDP80T00246A064200070001-1

The schematic wiring diagram of the regulator with two electric actuators is given in Fig.5, and with one actuator - in Fig.6.

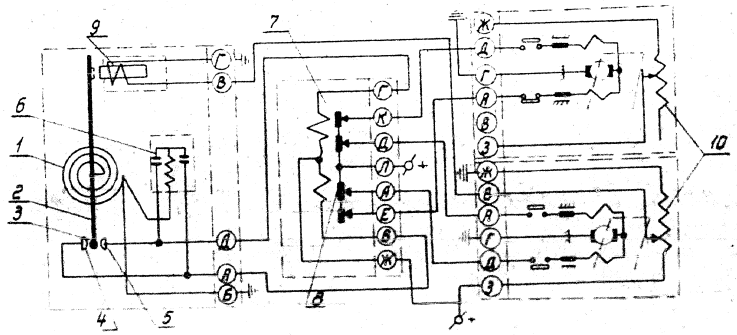

Fig.5. Wiring diagram of the Temperature Regulator with two Electric Actuators.

1 - bimetal spiral; 2 - armature; 3 - moving contact; 4,5 - fixed contacts; 6 - spark-quench unit; 7 - PM-2 relay; 8 - PM-1 relay; 9 - electromagnet; 10 - potentiometer.

With air temperature rise in the cabin above the permissible level, bimetal spiral (1, Fig.5) is twisted and turns the armature (2), thus closing the moving contact (3) with the fixed contact (4) in the thermostat.

In this case the winding of the relay (8) is energized and the electric actuator ensures air cooling action.

When cabin temperature decreases below the permissible level, the bimetal spiral is untwisted and turns the armature (2), thus closing the moving contact (3) with the fixed contact (5).

In this case the winding of the relay (7) is energized and the electric actuator ensures air heating action.

Declassified in Part - Sanitized Copy Approved for Release 2011/12/14 : CIA-RDP80T00246A064200070001-1

Declassified in Part - Sanitized Copy Approved for Release 2011/12/14 : CIA-RDP80T00246A064200070001-1

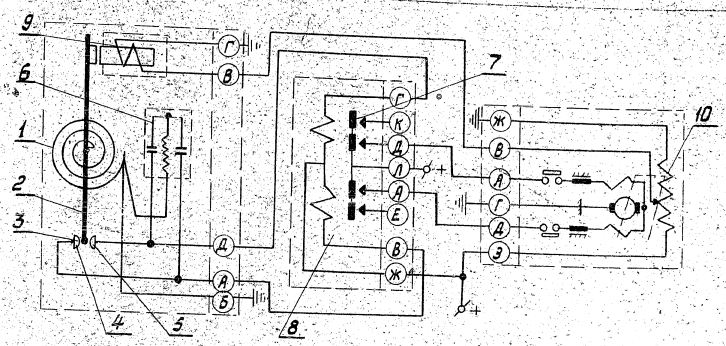

Fig.6. Wiring Diagram of the Temperature Regulator with One Electric Actuator.

1 - Bimetal spiral; 2 - armature; 3 - moving contact; 4,5 - fixed contacts; 6 - spark-quench unit; 7 - РП-2 relay; 8 - РП-2 relay; 9 - electromagnet; 10 - potentiometer.

To lessen sparking between the thermostat contacts and for noise level reduction during radio reception, the spark-quench unit (6) is used.

The bimetal spiral (1) is characterized with a slow response to the ambient temperature change, i.e. has a certain inertia response to a temperature, which may result in cabin temperature setting above or below the required level.

In order to avoid this, the system is equipped with a feedback unit switching the electric mechanism off in some advance before the spiral will do it.

The feedback in the regulator is accomplished by the electromagnet (9) acting upon the free end of the armature (2).

The voltage applied to the feedback electromagnet is taken from the potentiometer (10) located in the electric actuator.

Declassified in Part - Sanitized Copy Approved for Release 2011/12/14 : CIA-RDP80T00246A064200070001-1

Declassified in Part - Sanitized Copy Approved for Release 2011/12/14 : CIA-RDP80T00246A064200070001-1

V. INSTALLATION AND OPERATION INSTRUCTIONS

The thermostat and relay unit may be installed in any place of the cabin but as far as possible from a heat source.

The thermostat and relay unit are mounted on a bracket or a special panel.

The relay unit is permitted to be replaced if failed in operation.

The thermostat is attached in the cabin by four screws with nuts, and the relay unit - by two screws with nuts.

The regulator installation is to be carried out according to the installation diagram.

Overall dimensions of the thermostat are given in Fig.7 and the relay unit - in Fig.8.

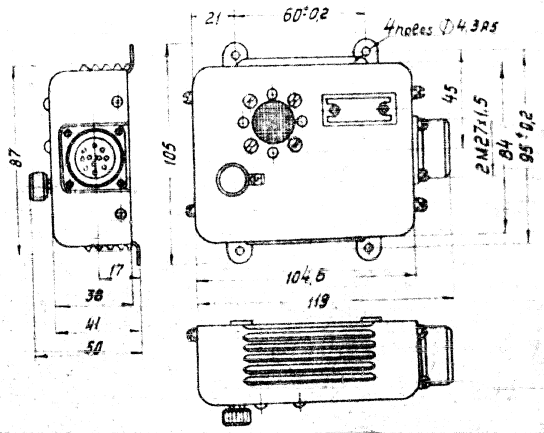

Fig.7. TPTBK-45M Thermostat Overall Dimensions

Declassified in Part - Sanitized Copy Approved for Release 2011/12/14 : CIA-RDP80T00246A064200070001-1

Declassified in Part - Sanitized Copy Approved for Release 2011/12/14 : CIA-RDP80T00246A064200070001-1

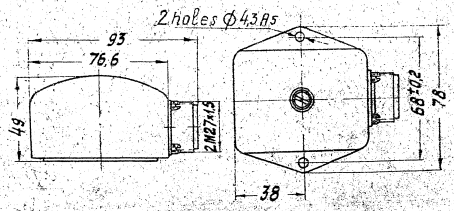

Fig.8. PП-2 Relay Unit Overall Dimensions

VI. SERVICE TROUBLES AND REMEDIES

Trouble	Probable cause	Remedy
Thermostat fails to operate.	1. Wire break.	1. Repair the break point.
	2. Mechanical damage to sensitive element details (support, spiral, angle, etc.)	2. Examine the spiral, armature and contacts. Replace the defective unit in thermostat.
	3. Contacts dirty.	3. Clean the contacts.
Calibration error is above the permissible limit.	1. Contacts burning.	1. Clean the contacts and readjust thermostat.
	2. Bimetal spiral characteristic changed.	2. Use new contact screws.
		3. Replace the sensitive element (spiral with armature).

Declassified in Part - Sanitized Copy Approved for Release 2011/12/14 : CIA-RDP80T00246A064200070001-1

Declassified in Part - Sanitized Copy Approved for Release 2011/12/14 : CIA-RDP80T00246A064200070001-1

Trouble	Probable cause	Remedy
When operating with two electric actuators only one is operative.	1. Wiring defective. 2. One of PM-2 relay unit defective.	1. Check the wiring. 2. Replace the defective relay.
Insensitivity zone is off the required limit.	1. Contacts burring. 2. Spark-quench unit defective.	1. Clean the contacts. 2. Replace the spark-quench unit.

Declassified in Part - Sanitized Copy Approved for Release 2011/12/14 : CIA-RDP80T00246A064200070001-1

Declassified in Part - Sanitized Copy Approved for Release 2011/12/14 : CIA-RDP80T00246A064200070001-1

FUEL PUMP (UNIT 463)

DESCRIPTION AND OPERATING INSTRUCTIONS

Declassified in Part - Sanitized Copy Approved for Release 2011/12/14 : CIA-RDP80T00246A064200070001-1

Declassified in Part - Sanitized Copy Approved for Release 2011/12/14 : CIA-RDP80T00246A064200070001-1

[redacted] (UNIT 463) DESCRIPTION AND OPERATION

INSTRUCTIONS

Declassified in Part - Sanitized Copy Approved for Release 2011/12/14 : CIA-RDP80T00246A064200070001-1

Declassified in Part - Sanitized Copy Approved for Release 2011/12/14 : CIA-RDP80T00246A064200070001-1

1. PURPOSE

The 463 unit is an electrically-driven centrifugal fuel pump used to create fuel pressure in an aircraft engine fuel pump inlet and to improve altitude performance of the aircraft fuel system.

2. TECHNICAL DATA

Pump drive - MB-280 electric motor

Power supply - single-wire, 27 V ± 10% D.C. system(electro-motor negative bruches are not grounded).

Operating fluid - T-1, TC-1, T-2 fuel

Rating - low, main, high

Permissible ambient air temperature range - from +50°C to -60°C

MAIN PERFORMANCE OF PUMP OPERATING AT AN ALTITUDE OF 0 TO 12,000 m ABOVE S.L.

Low Rating

Pressure difference created by pump delivering 4,000 litres/hour - not less than 0.4 kg./cm.²

Pressure difference created by pump at zero delivery - not more than 0.68 kg./cm.²

Current drawn - not more than 10 A

Continuous operation time - Long period.

Main Rating

Pressure difference created by pump delivering 4,000 litres/hour - not less than 0.85 kg./cm.²

Pressure difference created by pump at zero delivery - not more than 1.2 kg./cm.²

Current drawn - not more than 17 A.

Continuous operating time - Long period.

High Rating

Pressure difference created by pump delivering 2,000 litres/hour - not less than ... kg./cm.²

Declassified in Part - Sanitized Copy Approved for Release 2011/12/14 : CIA-RDP80T00246A064200070001-1

Declassified in Part - Sanitized Copy Approved for Release 2011/12/14 : CIA-RDP80T00246A064200070001-1

Pressure difference created by pump at zero delivery - not specified.

Current drawn - not more than 22 A.

Continuous operation time at 2,000 litres/hour - not more than 20 minutes.

Continuous operation time at zero delivery - not more than 75 minutes.

NOTES: a) All the above data are given for ambient air and fuel temperature of $20^{\circ}C \pm 10^{\circ}C$ and fuel specific gravity of 0.813-0.830 gr/cm^3.

b) The pump is permitted to operate at a high rating at a delivery of 3,000 litres/hour max. for 6 minutes; in this case the current consumed should not exceed 23.5 A.

Never use this rating after the pump was operated at another high rating.

3. PRINCIPLE OF OPERATION

The 463 unit pumping element is a one-stage centrifugal pump with an inlet fan.

When the pump shaft is rotating, the fuel from a service tank directly flows to the fan delivering the fuel at a certain speed to the impeller.

The rated capacity of the fan exceeds that of the impeller and so the pressure upstream of the impeller increases and excess fuel is thrown from the throat to a cone deflector.

Air bubbles contained in the fuel are evacuated from the throat in first turn and are brought together with the excess fuel to the deflector.

Declassified in Part - Sanitized Copy Approved for Release 2011/12/14 : CIA-RDP80T00246A064200070001-1

Declassified in Part - Sanitized Copy Approved for Release 2011/12/14 : CIA-RDP80T00246A064200070001-1

As a result of this, air bubbles are partially separated from the fuel and vapour locks are prevented.

Deaerated fuel enters the impeller passages.

The rotating impeller vanes somewhat accelerate the fuel flow and centrifugal forces built-up the fuel pressure. Forced by the impeller the fuel enters a scroll and then the pump outlet.

4. PUMP ELECTRICAL CONNECTION DIAGRAM

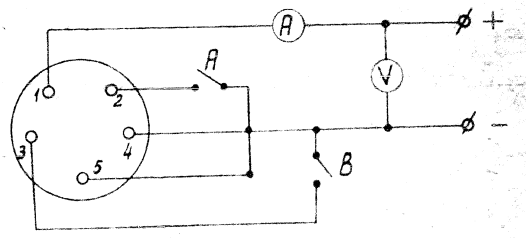

With A and B switches closed, the pump operates at the low [illegible].

With A switch closed and B switch open, the pump operates at [illegible] rating.

With A and B switches open, the pump operates at the high rating.

5. MOUNTING AND OPERATING THE PUMP

The pump is flanged to a fuel tank bottom so that the screen above inside the tank is submerged in fuel.

The mounted pump is piped to the fuel system pipeline.

The pump is connected to the aircraft electrical system via a plug connector, in accordance with the wiring diagram.

Declassified in Part - Sanitized Copy Approved for Release 2011/12/14 : CIA-RDP80T00246A064200070001-1

Declassified in Part - Sanitized Copy Approved for Release 2011/12/14 : CIA-RDP80T00246A064200070001-1

A pipe, 4x6 mm., is connected to the pump vent connection and is
uted overboard (to a low pressure zone). The location of the above
pe must provide draining of fuel by gravity which may enter the vent
ssage if the pump sealings are not tight.

To prevent any possibility of an explosion, the space surrounding
e pump portion located outside the tank must be well vented to remove
el vapours (in explosive concentration) which may enter the electric
tor interior.

Before installing the pump in the aircraft perform the following
erations:

1. Remove a shipping cap and plug from the pump; during this
eration all the vent holes must be plugged.

2. Depreserve the pump.

3. Visually inspect the unit for proper condition.

4. Mount a vent connection on the pump. Plug the other two vent
les.

When operating the pump bear in mind that:

1. The electric motor and plug connector must be protected from
ing affected by gasoline, kerosene, oil or other liquid (particularly
en mounting or removing the pump).

2. The pump screen sleeve must be periodically inspected and
shed, if necessary, to prevent the screen clogging.

3. The pump is not permitted to be operated dry (without fuel
n the tank).

4. Throughout the guaranteed service life a dripping fuel leakage
f not more than 0.5 cm.^{3} per operating hour is permitted through the
sealing into the vent line.

At a temperature below - 40°C a permissible leakage must not
exceed 2 drops per minute.

Declassified in Part - Sanitized Copy Approved for Release 2011/12/14 : CIA-RDP80T00246A064200070001-1

Declassified in Part - Sanitized Copy Approved for Release 2011/12/14 : CIA-RDP80T00246A064200070001-1

5. Throughout the guaranteed service life, the pump and electric
tor are not to be subjected to any maintenance operations."

6. If during the guaranteed service life the pump failed or
el leakage from the vent connection increased, forward the pump to
pair station.

Declassified in Part - Sanitized Copy Approved for Release 2011/12/14 : CIA-RDP80T00246A064200070001-1

Declassified in Part - Sanitized Copy Approved for Release 2011/12/14 : CIA-RDP80T00246A064200070001-1

FUEL FILTER 52T® 26-I

Brief Description and Maintenance Instructions

Declassified in Part - Sanitized Copy Approved for Release 2011/12/14 : CIA-RDP80T00246A064200070001-1

Declassified in Part - Sanitized Copy Approved for Release 2011/12/14 : CIA-RDP80T00246A064200070001-1

FUEL FILTER 52Tϕ 26-1

Brief Description and Maintenance

Instructions

Declassified in Part - Sanitized Copy Approved for Release 2011/12/14 : CIA-RDP80T00246A064200070001-1

Declassified in Part - Sanitized Copy Approved for Release 2011/12/14 : CIA-RDP80T00246A064200070001-1

I. Purpose

The 52TΦ26-1 filter is designed to clean fuel of solid particles.

II. Specifications

1. Grades of filtered fuels	T-1, State Standard GOST 4130-49 or T-2, GOST 8410-57 or TC-1, GOST 7149-54.
2. Temperature range of ambient air and fuel	from -60°C to +100°C
3. Maximum operating pressure	2 kg/sq.cm.
4. Maximum capacity	1.500 lit/hr.
5. Warrant service life of filter is equal to that of aircraft	
6. Operating capability of filtering element (before washing)	50 hrs.

III. Construction

The filter consist of housing 2, filtering unit 3, drain cock 4, elbows 1, 19, and packing rings 5, 17.

The filter housing is cast of aluminium alloy.

Located in the upper portion of the housing is an out-port with metric thread for the outlet elbow.

Declassified in Part - Sanitized Copy Approved for Release 2011/12/14 : CIA-RDP80T00246A064200070001-1

Declassified in Part - Sanitized Copy Approved for Release 2011/12/14 : CIA-RDP80T00246A064200070001-1

Parallel to the out-port is an in-port, threaded to receive an inlet elbow.

Two lugs fitted on the outside of the housing serve for attaching the filter to the aircraft structure.

The lower portion of the housing carries two supports for a crossbar.

A boss with a threaded hole to accomodate drain cock 4 is located on the side portion of the housing.

Cover 7 is provided with a projection to secure the filtering element with the aid of a spindle. Handle 9 through the agency of a nut is held in a threaded bore of the cover.

Positioned between cover 7 and support 11 is spring 10 which presses packing washer 13 (placed between washers 12 and 14) to the housing and thus prevents unfiltered fuel from getting into the out-port.

The housing-to-cover joint is sealed by means of packing ring 6.

Cover 7 is pressed to the housing by a screw turned into crossbar 8 which rests against the housing lugs.

The screw is held in the cover by a slotted washer entering the screw notch and is fixed in the cover by a nut.

In the middle of the crossbar there is a threaded bore to receive the screw with handle 9. The ends of the

Declassified in Part - Sanitized Copy Approved for Release 2011/12/14 : CIA-RDP80T00246A064200070001-1

Declassified in Part - Sanitized Copy Approved for Release 2011/12/14 : CIA-RDP80T00246A064200070001-1

crossbar are fitted with stops to limit turning of the crossbar when the handle is being rotated.

Filtering element 3 consists of a stack of filtering discs. A disc is comprised of two cleaning washers. Each washer is made of a screen rolled into a ring. Both cleaning washers and a corrugated spacer placed between them are rolled in a ring. The filtering discs are mounted on three-blade dural spoke 15 and tied by stud 16 and nut 18. The nut is fixed on the stud with the aid of locking wire. The stud is screwed into support II. Slide-fitted into this support is the cylindrical part of cover 7.

Support II is secured in cover 7 by a dowel and locked with a split pin.

The slot machined in support II provides for axial displacement of the assembled filtering elements relative to the cover.

VI. Operation

Fuel enters the filter via the in-port, passes the filtering element and flows upward into the out-port.

When passing through the screen of the filtering element fuel is cleaned of all foreign solids if they happen to be too large to penetrate through the screen meshes. Besides, the fuel inside the filter changes its direction due to which the flow speed decreases and some foreign solids (even those smaller than the screen meshes) settle in the lower part of the filter housing.

Declassified in Part - Sanitized Copy Approved for Release 2011/12/14 : CIA-RDP80T00246A064200070001-1

Declassified in Part - Sanitized Copy Approved for Release 2011/12/14 : CIA-RDP80T00246A064200070001-1

V. Maintenance

The Manufacturer delivers the filter slushed with corrosion-preventive compound. Therefore, prior to installation on the aircraft the filter should be deprocessed. This will be effected by immersing the filter into a bath of aviation gasoline -70 until the preservative is completely removed. Then the filter should be cleaned with dry compressed air.

While installing the filter on the respective studs do not fail to place washers under the nuts.

The filter should be inspected at the beginning of each flying day. When inspecting the filter about 0.5-0.6 lit. of fuel will be drained through the drain cock.

Every 50 flying hours the filter must be disassembled and each filtering disc should be thoroughly washed in gasoline.

The washing procedure is as follows:

close the cock on the tank-to-filter pipe line, drain the filter of fuel through the drain cock, unlock the handle, release the crossbar, remove the cover and the filtering element. When doing see that the filtering discs do not brush against the housing edges and that there are no nicks and scratches on the housing sealing chamfer.

The filtering discs should be washed in gasoline B-70 with the aid of special holders or tweezers.

Declassified in Part - Sanitized Copy Approved for Release 2011/12/14 : CIA-RDP80T00246A064200070001-1

Declassified in Part - Sanitized Copy Approved for Release 2011/12/14 : CIA-RDP80T00246A064200070001-1

Washing over, reassemble the stack. In the stack the filtering discs should be tightened by the nut so that they may be turned relative to each other with a certain manual effort.

When inserting the filtering element into the housing make sure packing ring 6 is snug in the housing chamfer.

To ensure a tight contact between cover 7 and the housing along its end face to avoid overtightening of the cover, the screw should be turned until the cover face is tight against the housing.

Upon accomplishment of the above operations the filter should be checked for leakage, for which purpose the fuel system lines must be filled with prescribed fuel.

If leakage of fuel or sweating is detected at the cover-to-housing joint, packing ring must be replaced.

Should leakage be found at the threaded joint between the housing and the drain cock, replace packing ring 9. Fuel leakage through the elbow joints may be eliminated by proper tightening of the elbows. If this proves ineffective, replace packing ring 17.

VI. Processing Specimens

If a filter is to be sent to a repair organization or is to be stored for periods up to one year, it should be processed as follows:

Declassified in Part - Sanitized Copy Approved for Release 2011/12/14 : CIA-RDP80T00246A064200070001-1

Declassified in Part - Sanitized Copy Approved for Release 2011/12/14 : CIA-RDP80T00246A064200070001-1

1. Wash the filter in clean aviation gasoline -70 (containing no antidetonant) and blow dry with compressed air.

2. To process the filter use aviation oil grade MK-22 or MK-20.

3. Immerse the filter into a bath of oil heated to 110° or 115°C for 5-6 minutes. Take the filter out of the bath, cool it to 30° or 35°C and then dip the filter into another bath with oil heated to 60° or 70°C.

Drain excess oil from the filter interior and blank off all the openings.

4. Wrap the processed filter into two sheets of paraffin or oiled paper, tie with twine and pack into a special container.

Note: The filter should be processed not later than 3 hours after it was removed from the aircraft.

Declassified in Part - Sanitized Copy Approved for Release 2011/12/14 : CIA-RDP80T00246A064200070001-1

Declassified in Part - Sanitized Copy Approved for Release 2011/12/14 : CIA-RDP80T00246A064200070001-1

1. Wash the filter in clean aviation gasoline -70 (containing no antidetonant) and blow dry with compressed air.

2. To process the filter use aviation oil grade MK-22 or MK-20.

3. Immerse the filter into a bath of oil heated to 110° or 115°C for 5-6 minutes. Take the filter out of the bath, cool it to 30° or 35°C and then dip the filter into another bath with oil heated to 50° or 70°C.

Drain excess oil from the filter interior and blank off all the openings.

4. Wrap the processed filter into two sheets of greaseproof or oiled paper, tie with twine and pack into a special container.

Note: The filter should be processed not later than 3 years after it was removed from the aircraft.

Declassified in Part - Sanitized Copy Approved for Release 2011/12/14 : CIA-RDP80T00246A064200070001-1

Declassified in Part - Sanitized Copy Approved for Release 2011/12/14 : CIA-RDP80T00246A064200070001-1

52ТФ 26-1 Filter. General View.

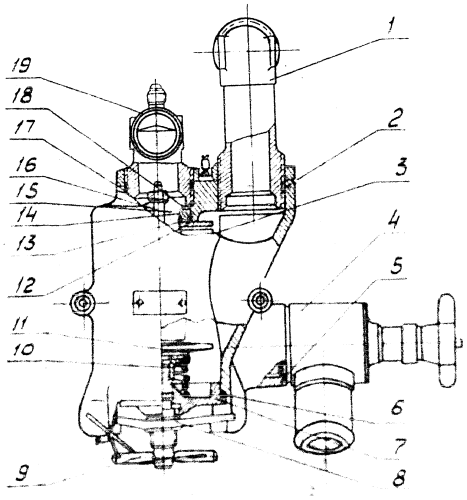

Declassified in Part - Sanitized Copy Approved for Release 2011/12/14 : CIA-RDP80T00246A064200070001-1

Declassified in Part - Sanitized Copy Approved for Release 2011/12/14 : CIA-RDP80T00246A064200070001-1

FUEL FILTER 12TH 29

Brief Description and Maintenance

Instructions

Declassified in Part - Sanitized Copy Approved for Release 2011/12/14 : CIA-RDP80T00246A064200070001-1

Declassified in Part - Sanitized Copy Approved for Release 2011/12/14 : CIA-RDP80T00246A064200070001-1

FUEL FILTER 12T♦ 29

Brief Description and Maintenance Instructions

Declassified in Part - Sanitized Copy Approved for Release 2011/12/14 : CIA-RDP80T00246A064200070001-1

Declassified in Part - Sanitized Copy Approved for Release 2011/12/14 : CIA-RDP80T00246A064200070001-1

I. Purpose

The 12Ф 29 filter is designed to clean fuel of solid particles.

II. Specifications

1. Grades of filtered fuels	TC-1, State Standard GOST 7149-54; T-1, GOST 4138-49; T-2, GOST 8410-57.
2. Operating pressure	up to 3 kg/sq.cm.
3. Maximum capacity	25 lit/min.
4. Hydraulic resistance of clean filter to fuel flow at maximum flow rate and fuel temperature of +20°C	not over 0.[illegible] kg/sq.cm.
5. Temperature of fuel and ambient air	from -40°C to [illegible]
6. Pressure drop (across filtering element) at which by-pass valve operates	[illegible] kg/sq.cm.
7. Fineness of filtration	10 microns
8. Filtering element operating capability at 25 lit/min. flow rate (before replacement)	50 hours

Declassified in Part - Sanitized Copy Approved for Release 2011/12/14 : CIA-RDP80T00246A064200070001-1

Declassified in Part - Sanitized Copy Approved for Release 2011/12/14 : CIA-RDP80T00246A064200070001-1

3. Warrant service of filter
is equal to that of engine.

III. Construction

The filter consists of housing 1, cover 8 and paper filtering element 2 mounted inside the housing.

The upper portion of the housing carries a boss which has a threaded hole for plug 6 and a bore to accomodate by-pass valve 3. The latter is acted upon by spring 4 whose tension is adjusted during assembly by thrust pin 7 through guide 5. At the bottom of the housing is a threaded hole for drain cock 12.

Cover 8 is pressed against the housing by means of screw 9 turned into crossbar 10 which bears against the lugs of the housing.

The cover-to-housing joint is sealed with packing ring 11.

The mesh paper filtering element 2 consists of paper-screen corrugated frame fitted at both end faces with aluminium discs. These discs are connected to the housing adapter sleeve and to the cover through rubber packing rings.

A spring frame supports the filtering element internally and adds to its rigidity.

IV. Operation

Fuel enters the housing via the in-port and fills cavity "a", then passes through the paper partition of the filtering element into cavity "b" and flows out through the out-port.

Declassified in Part - Sanitized Copy Approved for Release 2011/12/14 : CIA-RDP80T00246A064200070001-1

Declassified in Part - Sanitized Copy Approved for Release 2011/12/14 : CIA-RDP80T00246A064200070001-1

Declassified in Part - Sanitized Copy Approved for Release 2011/12/14 : CIA-RDP80T00246A064200070001-1

Declassified in Part - Sanitized Copy Approved for Release 2011/12/14 : CIA-RDP80T00246A064200070001-1

4. Ensure, previous [illegible] the filter [illegible] and the adjacent parts of the engine are spaced so as to [illegible] the possibility of their contact in case of [illegible] vibration.

VII. Filter Maintenance

1. The engines fitted with this filter may be [illegible] on the following grades of fuels:

T-1, State Standard GOST 7149-54

TS-1, GOST 4138-49

T-2, GOST 6410-57

Usage of any other fuel grade is permissible only after the Manufacturer's approval.

2. The filter should be inspected at the beginning of a flying day. When inspecting the filter drain [illegible] be 0.5 lit. of fuel through the drain cock.

3. The paper filtering element should be replaced every 50 hours.

4. Never attempt to disassemble the filter [illegible] field conditions. Removal of the cover for replacing the filtering element is the only permissible [illegible] and

5. Defective filters should be removed [illegible] replaced.

Declassified in Part - Sanitized Copy Approved for Release 2011/12/14 : CIA-RDP80T00246A064200070001-1

Declassified in Part - Sanitized Copy Approved for Release 2011/12/14 : CIA-RDP80T00246A064200070001-1

12ТФ2Р Filter. General View.

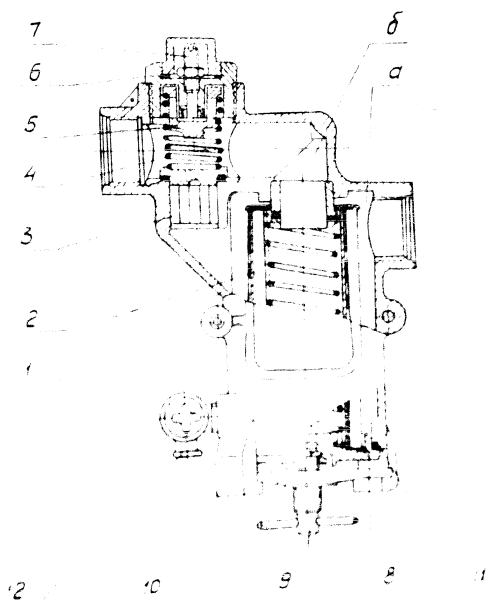

Declassified in Part - Sanitized Copy Approved for Release 2011/12/14 : CIA-RDP80T00246A064200070001-1

Declassified in Part - Sanitized Copy Approved for Release 2011/12/14 : CIA-RDP80T00246A064200070001-1

WHEEL WITH BRAKE (Item KT-77M)

DESCRIPTION AND OPERATION INSTRUCTIONS

Declassified in Part - Sanitized Copy Approved for Release 2011/12/14 : CIA-RDP80T00246A064200070001-1

Declassified in Part - Sanitized Copy Approved for Release 2011/12/14 : CIA-RDP80T00246A064200070001-1

WHEEL WITH BRAKE

(Item KT77M)

DESCRIPTION AND OPERATION INSTRUCTIONS

Declassified in Part - Sanitized Copy Approved for Release 2011/12/14 : CIA-RDP80T00246A064200070001-1

Declassified in Part - Sanitized Copy Approved for Release 2011/12/14 : CIA-RDP80T00246A064200070001-1

DESCRIPTION AND OPERATION INSTRUCTIONS

The 1050x300B wheel (item KT77M) with a disc brake and skid detector.

I. PURPOSE

The 1050x300B wheel (Fig.1 and 2) for a high pressure aircraft tyre fitted with a disc brake and skid detector is designed for installation on the main L.G. to ensure a take-off run, to reduce a landing run and also to taxi the aircraft and test the engines on the ground with the wheels braked without placing chocks around them.

II. TECHNICAL DATA

1. Initial tyre inflating pressure ..... P_c 6.5 kg/cm^2
2. Brake operating pressure ..... P_{brake}=10.5^{+10} kg/cm^2
3. Wheel weight (without tyre) ..... G_w = 1[illegible] kg.

Declassified in Part - Sanitized Copy Approved for Release 2011/12/14 : CIA-RDP80T00246A064200070001-1

Declassified in Part - Sanitized Copy Approved for Release 2011/12/14 : CIA-RDP80T00246A064200070001-1

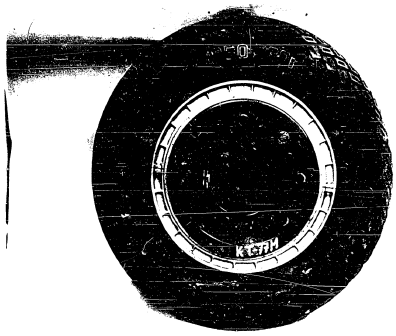

Fig.1. Wheel 1050x300B (item KT77M) with Disc Brake.
General View

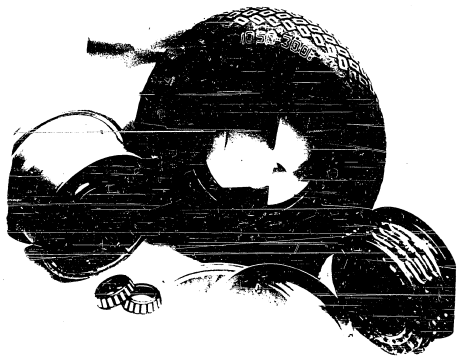

Fig.2. Wheel 1050x300B with Brake (item KT77M), Disassembled

Declassified in Part - Sanitized Copy Approved for Release 2011/12/14 : CIA-RDP80T00246A064200070001-1

Declassified in Part - Sanitized Copy Approved for Release 2011/12/14 : CIA-RDP80T00246A064200070001-1

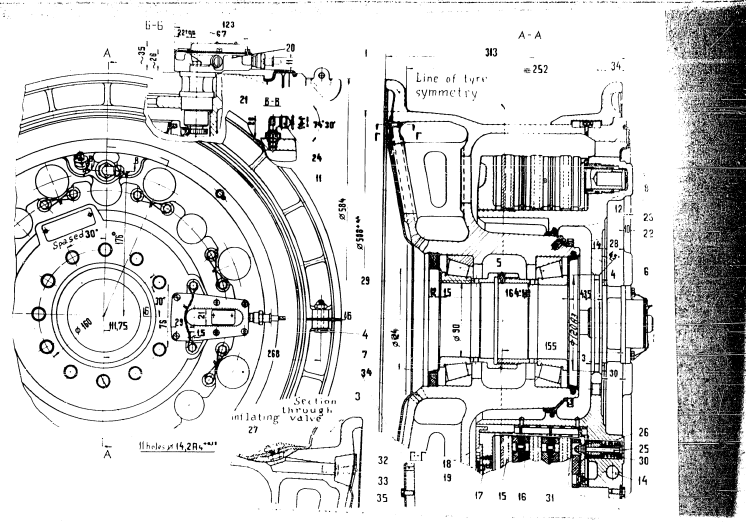

Fig.3. Wheel 1050x300B (item KT77M)

a) Line of tyre symmetry

b) Valve section

c) 11 holes, $14{,}2A4^{+0.12}$ mm.dia.

d) spaced 30 deg. apart.

III. WHEEL DESIGN

The wheel (Fig.3) comprises the following main assemblies and parts:

1. The drum (1) with two detachable half-flanges (2) installed on the L.G. axle with two radial roller bearings (5).

2. The three-disc brake attached to the L.G. fixed flange by 11 bolts through the holes on the brake casing flange (8).

3. The skid detector (20) included in the aircraft anti-skid automatic control.

Declassified in Part - Sanitized Copy Approved for Release 2011/12/14 : CIA-RDP80T00246A064200070001-1

Declassified in Part - Sanitized Copy Approved for Release 2011/12/14 : CIA-RDP80T00246A064200070001-1

4. The 1050x300B tyre (3) mounted on the drum hoop. The tyre tube is inflated with compressed air through the inflation valve (27) installed on the drum hoop.

The drum (1) is a shaped casting, the external hoop of which has a special section required for the tyre proper installation.

To facilitate the tyre mounting, one side of the drum is made detachable in the form of two half-flanges (2) secured to each other by the bolts (4) through the special lugs. When the wheel is assembled, the half-flanges are held on the drum by the rim and are prevented from turning on the wheel hoop by the keys (28). The drum fixed side has a special boss with a hole, which receives the tube inflation valve (27).

Pressed in the boss slots and bolted to the wall of the drum hoop are 10 guides of square section designed to support and to move the brake discs along the wheel axle, when braking the wheel.

The wheel rotates in two conical radial roller bearings (5).

Installed between the ends of the bearing inner races is a distance bushing (29) with adjustable length, designed to ensure the required operating play in the bearings.

On the outside the bearings are protected from dirt and lubricant leakage by oil seals (6 and 7).

A fender (11), protecting the drum cavity from dirt, is installed in the drum.

The hoop and hub of the drum are connected by means of cast spokes of T-section (which are load-carrying elements of the wheel).

The wheel incorporates a disc-type brake which consists of the following main parts and assemblies: brake casing (8), eight brake cylinders (sleeve (12) and piston (13)), three brake bimetallic discs (15), two intermediate discs (16), pressure disc (9), supporting disc (17), shield (10) and eight anti-skid assemblies (parts 25,26 and 30).

Declassified in Part - Sanitized Copy Approved for Release 2011/12/14 : CIA-RDP80T00246A064200070001-1

Declassified in Part - Sanitized Copy Approved for Release 2011/12/14 : CIA-RDP80T00246A064200070001-1

Each cylinder is a steel threaded sleeve (12) screwed into the casing (8) hole. Inside the sleeve the rod (13) is located.

The cavities of the cylinders communicate through a circular passage (14).

The sleeves and rods are sealed with rubber sealing rings.

The bimetallic brake discs (15) incorporate 10 separate sectors hinged to each other.

The intermediate discs (16) are discs of steel sheet, riveted to them are friction blocks of plastics (8 ea on each side) forming together with the brake discs pig iron the friction pair.

The pressure disc (9) is a steel disc. Eight brake shoes are bolted to its one side.

The intermediate discs and pressure disc are fitted with pins which enter the guide slots of the brake casing. The supporting disc (17) is made of magnesium alloy in the form of a shaped nut.

On the inside of the disc eight brake shoes are bolted.

On the outside of the disc are four slots, into which special thrusts (18) are inserted. The thrusts are attached to the disc by the bolts (19) and serve to prevent the disc from turning when braking.

When supplying pressure to the brake cylinders, the rods move in the axial direction (the initial gap between the discs in the brake is removed).

The pressure disc (9) presses the whole discs assembly (15 and 16). When the pressure disc moves, it compresses the anti-skid assemblies return springs (20) by means of a pin with a clamp. The compression value of the return spring corresponds to the clamp maximum movement in the anti-skid assembly and is equal to the total gap between the discs.

When the wheel is rotating a brake moment occurs due to compression of the disc assembly.

Declassified in Part - Sanitized Copy Approved for Release 2011/12/14 : CIA-RDP80T00246A064200070001-1

Declassified in Part - Sanitized Copy Approved for Release 2011/12/14 : CIA-RDP80T00246A064200070001-1

When decreasing the pressure in the cylinders the restrainer force is removed and the return springs (26) release the disc and pistons to the initial position, which results in the wheel unbraking.

During the brake operation the constant gap and the pistons operating travel are automatically adjusted.

Installed on the brake flange by means of a special bracket is the skid detector (20). On the wheel hub a driving gear (22) is rigidly fixed, it is engaged with the driven gear (21) of the bracket connected with the skid detector shaft. The gear train between the drum hub and the skid detector is protected from dirt by the oil seal(23).

When braking the wheel, if the braking moment exceeds the wheel torque (the wheel begins skidding), the skid detector (20) sends an electric pulse to the brake system solenoid valve which partly discharges the pressure from the brake cylinders and the wheel is unbraked.

Thus, the pressure in the brake, when braking, is within the maximum permissible value which does not cause wheel skidding.

IV. MOUNTING AND OPERATION INSTRUCTIONS

I. Mounting the Tyre on the Wheel

When mounting a tyre on the wheel, use a clean wooden deck, plywood or tarpaulin.

Before mounting inspect the tyre, tube and wheel in order to prevent sand and dirt from getting inside the tyre.

Powder the tyre inside and the tube with talc. Mount a new tyre on the wheel employing the following procedure:

Unscrew the bolts (4) and remove the half-flanges (2). Install the tyre with the tube on the hoop so that the inflation valve (27) coincides with the hole in the drum hoop.

Declassified in Part - Sanitized Copy Approved for Release 2011/12/14 : CIA-RDP80T00246A064200070001-1

Declassified in Part - Sanitized Copy Approved for Release 2011/12/14 : CIA-RDP80T00246A064200070001-1

Insert the valve end through the hole in the drum and tighten it by the nut (32).

Using a tyre puller (type CL 04), pull the tyre wall from the drum detachable flange so as to install the half-flanges on the drum. Install the detachable half-flanges on the drum and connect their lugs with the bolts (4), the nuts should be screwed on the bolts only till the play is removed (without tightening the bolt).

Inflate the tyre with compressed air up to the operating pressure and tighten the nut (32) so that the space between the end of the inflating valve and that of the boss on the drum should be within ± 2 mm.

Do not overtighten the nut to prevent damage to the tube.

Tighten the valve core and check it for air tightness.

Screw the cap (33) on the valve end.

2. Mounting the wheel on the axle.

Before installing the wheel on the aircraft L.G. remove the preservation-preventive lubricant from the bearings by washing them with clean gasoline.

Fill the bearings with operation lubricant so that only the labyrinths between the rollers and the race are filled.

Install the brake on the L.G. axle and secure it on the L.G. flange with bolts.

Straighten the slots in all the brake discs so that, when mounting the drum, the wheel guides easily enter the discs slots.

Next, place the oil seal (6) and the bearing inner race on the axle.

Install the distance bushing (29) but at first check that its markings coincide with those on the wheel.

Declassified in Part - Sanitized Copy Approved for Release 2011/12/14 : CIA-RDP80T00246A064200070001-1

Declassified in Part - Sanitized Copy Approved for Release 2011/12/14 : CIA-RDP80T00246A064200070001-1

When mounting, see that the length of the distance bushing, installed by the Manufacturer, is constant.

Then mount the wheel on the axle so that the drum guides enter the brake discs slots.

Next, place the second roller bearing inner race and obturator with the oil seal on the axle and tighten the whole assembly with the axle nut.

The operation gap value in the roller bearings of the wheel is ensured by installing the distance bushing (29), therefore, when mounting the wheel on the axle, the nut is fully tightened (without further adjustment).

After the wheel is mounted, check it for proper mounting as follows:

1. Turn the wheel mounted on the axle by hand, the wheel should rotate easily.

2. Shaking the wheel in the plane perpendicular to the wheel rotation plane; a slight axial play should be felt in the roller bearings. Having ensured, that the wheel is properly mounted lock the nut.

During the wheel mounting, when aligning the brake discs slots with the guides, pay attention to presence of figure markings. The figures on the discs slots should coincide with those on the wheel guides, as the wheels permit individual fittness of splined-joints elements.

Install the skid detector bracket on the brake flange.

When installing the skid detector bracket, slightly turn the wheel to engage the gear teeth of the bracket with those of the wheel.

Install the skid detector matching its rotation with the wheel rotation.

Declassified in Part - Sanitized Copy Approved for Release 2011/12/14 : CIA-RDP80T00246A064200070001-1

Declassified in Part - Sanitized Copy Approved for Release 2011/12/14 : CIA-RDP80T00246A064200070001-1

Install the skid detector on the wheel rotating counterclockwise; the arrow marked on the skid detector name plate indicates the opposite direction of rotation, i.e. clockwise rotation.

Install the skid detector rotating clockwise in a similar way.

After installing the skid detector and bracket, tighten the attachment bolts and lock with wire.

Connect the pipeline to the brake (24) pipe connection and discharge the air from the brake through the needle valve; the valve should be unlocked and unscrewed 2-3 revolutions. After the air is discharged screw and lock the valve.

Remove the wheel from the aircraft L.G. in the order reverse to installation.

3. Disassembling and Assembling the Wheel and Brake

Disassemble the wheel as follows:

1. Unscrew the nut (32) and the valve core and discharge the air from the tyre tube.

2. Place the wheel on the deck with the fixed side down.

3. Install the tyre puller (C 1404 type) on the wheel and pull the tyre wall down from the wheel detachable side, remove the bolts (4) and half-flanges (2).

4. Turn the wheel and use the tyre puller to pull the tyre from the drum fixed side. Remove the tyre and tube from the wheel and inspect them.

Disassemble the brake as follows:

1. Disconnect the pipeline from the brake (24) pipe connection and cover the pipe connection with a protective cap.

2. Unscrew the bolts attaching the brake to the L.G. flange and remove the brake from the axle.

Declassified in Part - Sanitized Copy Approved for Release 2011/12/14 : CIA-RDP80T00246A064200070001-1

Declassified in Part - Sanitized Copy Approved for Release 2011/12/14 : CIA-RDP80T00246A064200070001-1

3. Unlock the bolts (19), locking sectors (18) on the supporting disc (17) and unscrew them. Remove the locking sectors and unscrew the supporting disc.

4. Remove the brake (15) and intermediate (16) discs. When disassembling the intermediate discs, mark their order and observe it when assembling; do not change the matching friction surfaces of the brake and friction discs.

Unlock the nuts securing the pins (25) on the pressure disc and unscrew them.

Remove the pressure disc (9).

To remove the anti-skid assembly, remove the screws attaching the thrust plates (31) and then the anti-skid assemblies can be removed from the sockets easily.

5. Disassemble the pistons of the cylinders only in case of tightness damage and leakage. For disassembling put so many brake and intermediate discs on the brake casing and screw the supporting disc so that the piston should extend 40 ± 1 mm. from the cylinder; the pressure disc (9) should be removed.

Connect the pipeline to the brake pipe connection and press the pistons by low pressure (10-15 Atm) from the cylinders till they rest against the brake discs.

Remove the supporting, intermediate and brake discs.

Using a soft clean cloth, carefully remove the pistons slightly shaking them in the sleeve and inspect the rubber sealing rings and the sleeve surfaces.

In case of evident defects of the rubber sealing ring (damaged surface) replace the ring.

Assemble the brake in the order reverse to its disassembling.

When assembling, if the hydraulic mixture gets on the brake discs or on the friction blocks clean them with pure gasoline.

Declassified in Part - Sanitized Copy Approved for Release 2011/12/14 : CIA-RDP80T00246A064200070001-1

Declassified in Part - Sanitized Copy Approved for Release 2011/12/14 : CIA-RDP80T00246A064200070001-1

Then treat the operating surface of the brake shoes with a fine emery cloth.

To adjust the initial clearance, after all the parts are assembled, screw the supporting disc till the brake and intermediate discs are fully tightened and then unscrew them 1 revolution.

Install the locking sectors (18) and bolt them. Lock the bolts.

Check the brake for proper operation of the return springs, to do this connect the pipeline to the brake pipe connection and apply a pressure of 100 atm. 5-8 times. After the pressure is released the initial total gap between the discs should be within 1.8-3.5 mm. In operation it is permitted to reduce the gap to 0.8 mm. without blocking the wheel by the brake.

Check the brake for tightness, using a pressure gauge, by a pressure of 100 kg./cm^2 for 10 min. and in this case no pressure drop should be noticed.

Renew all the threaded connections locking by wire.

V. OPERATION INSTRUCTIONS

1. When disassembling the brake, never remove or install the pistons if dirt can get inside the cylinder cavities.

Do not unscrew the bolts attaching the anti-skid assemblies clamps.

After disassembling and assembling the brake, check it for tightness and proper operation of the anti-skid assemblies.

2. When operating the wheel, do not exceed the permissible value of kinematic energy (See Section VI) not to overheat the wheel and tyre.

Maximum permissible temperature on the wheel hoop under the tyre is not more than +125°C, and on the brake casing - in the area of

Declassified in Part - Sanitized Copy Approved for Release 2011/12/14 : CIA-RDP80T00246A064200070001-1

Declassified in Part - Sanitized Copy Approved for Release 2011/12/14 : CIA-RDP80T00246A064200070001-1

VI. BRAKES OPERATION

A. New Brakes Running

1. After the new brakes are installed, run the brakes when taxiing with braking, to ensure effective braking. To prevent the brakes from overheating do not taxi when braking with engines running at an increased thrust.

2. When running the brake, do not brake the wheels for an extended period of time to prevent the brakes from overheating.

After each taxiing with effective braking, stop the aircraft and cool the brake for 30-60 minutes depending on heating degree.

B. Brakes Operation Pressure and Parking Braking

The operation pressure in the brakes and the braking condition is set according to the results of flying tests for the each type of aircraft.

Before adjusting the braking condition, determine the brake pressure required to prevent the wheel from turning, with the aircraft parked, when testing the engines.

At normal landings and, when braking is used at parking, the pressure in the brakes should not exceed P_{brake}=110 kg./cm^2.

In the wheels operation prolonged (continuous) brakings, when the aircraft is parked, are permitted (for 48 hours).

Before the brakes are "ON", when the aircraft is parked, the elements of the wheel and brake should be cooled up to a temperature not more than +50°C, i.e. a hand can stand this temperature.

Declassified in Part - Sanitized Copy Approved for Release 2011/12/14 : CIA-RDP80T00246A064200070001-1

Declassified in Part - Sanitized Copy Approved for Release 2011/12/14 : CIA-RDP80T00246A064200070001-1

C. Braking at Single Landing

At single landing of the aircraft with normal landing weight, the brakes should be "ON" when the aircraft landing speed does not exceed V_{brake}=200 km/hr.

Under these conditions the wheel brakes consume kinematic energy corresponding to their energy capacitance and the heating temperature of the wheel and brake parts, does not exceed the permissible values.

Aircraft landing run with wheel braking is equivalent to a single landing and should be performed according to the conditions for a single landing mentioned above.

To cool the engines, braking is permitted for 5-7 minutes after landing at parking.

D. Braking at Subsequent Landings

(Training flights)

In case of necessity in subsequent take-off and landings under specific conditions determine a time interval between landings required for cooling the parts of the wheel and brake up to +40- +60°C (i.e. a hand can stand such a temperature) to avoid overheating the wheels at each subsequent landing.

E. Braking when Taxiing

When taxiing from the parking place to the take-off line and from the runway to the parking place, as a rule use the brakes only to maintain the flight direction and to stop the aircraft without heating the parts of the wheel and brake up to temperatures exceeding maximum permissible values.

Declassified in Part - Sanitized Copy Approved for Release 2011/12/14 : CIA-RDP80T00246A064200070001-1

Declassified in Part - Sanitized Copy Approved for Release 2011/12/14 : CIA-RDP80T00246A064200070001-1

After each running short time braking when parking is permitted for 3-5 minutes.

When taxiing do not run the aircraft at high engine ratings with simultaneous braking.

F. Braking at Emergency Landings

a) Aborted take-off or landing with the take-off weight and with the brakes "ON" even at a speed of $V_{br.}$=200 km/hr. are emergency landings.

b) Landing with normal landing weight of the aircraft and the speed, when the brakes are "ON", exceeding $V_{br.}$=200 km/hr. is emergency landing too.

In the event of emergency landing with application of the brakes thoroughly examine the parts of the wheel and tyre to make sure that they are reliable for further operation and draw up a corresponding record.

VII. PERIODIC INSPECTION

1. Perform the periodic inspection of the wheels after the first five landings and then after every 50 landings of the aircraft.

During periodic inspections remove the wheel from the L.G. axle. Without removing the brake visually examine it. Examine the raceway surfaces of the bearings and visually inspect the other parts of the wheel, clean the vent holes in the wheel. If the brake sheet friction surface is crumbled or the brake discs end is cracked, disassemble and examine the brakes.

Any number of small cracks in the pig iron coating and annular scores not more than 0.5 mm. deep are permitted on the operating surfaces of the brake discs bimetallic sectors.

Declassified in Part - Sanitized Copy Approved for Release 2011/12/14 : CIA-RDP80T00246A064200070001-1

Declassified in Part - Sanitized Copy Approved for Release 2011/12/14 : CIA-RDP80T00246A064200070001-1

Cracks stretching over the entire width of the sector and the entire thickness of the pig iron coating up to the steel framework are not permitted.

If such cracks are detected at least on one sector send the brake to repair.

Any number of small cracks on the operating surface of the brake shoes and one crack in the area of middle rivets passing to the framework are permitted.

2. Check the tyre pressure by means of a pressure gauge with scale division value of 0.5 kg/cm^2.

3. Fill the bearings with an operating lubricant not less than once every three months.

Bearing inner races should be stocked as an assembly and, in case of changing one or both races of the bearings, it is necessary to adjust the distance bushing length anew as follows: distance bushing length "L" (see Fig.4) is set 0.18-0.25 mm. more than the actual size "l" (between the inner race ends of the bearings) measured to within 0.01 mm. Measure the "l" and set the length "L" of the distance bushing under the action of an axle force of $\approx$ 10 kg.

After the length of the bushing is readjusted stamp on it again the actual size measured to within 0.01 mm. (eliminate the previous size marking). On the replaced races of the bearings mark the item index and the wheel No. by means of an electrograph.

4. Permissible one-sided wear of the intermediate discs blocks is 5.5 mm. and of the bimetallic discs - 0.6 mm.

At total wear of the discs by the value, causing the pressure disc shift by 33 mm. from the flange end, replace the worn discs with new ones (See Fig.5).

Declassified in Part - Sanitized Copy Approved for Release 2011/12/14 : CIA-RDP80T00246A064200070001-1

Declassified in Part - Sanitized Copy Approved for Release 2011/12/14 : CIA-RDP80T00246A064200070001-1

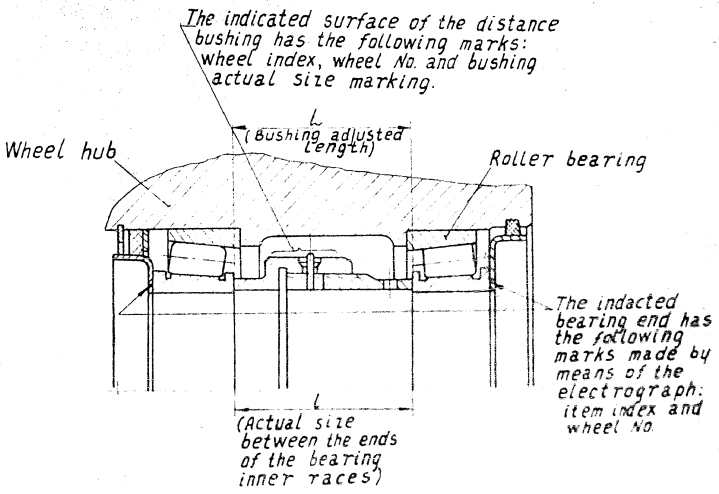

Fig.4. Distance Bushing Installation

In case of the blocks [illegible] surface [illegible] flush with the steel framework remove the wheel and send the brake to the repair shop to change the friction material.

Disassemble the brake as specified in section IV of the Operation Instructions.

In operation, the bolts attaching the brake shoes to the pressure (9) and supporting (17) discs may be loosened (up to 1/2 revolution).

Declassified in Part - Sanitized Copy Approved for Release 2011/12/14 : CIA-RDP80T00246A064200070001-1

Declassified in Part - Sanitized Copy Approved for Release 2011/12/14 : CIA-RDP80T00246A064200070001-1

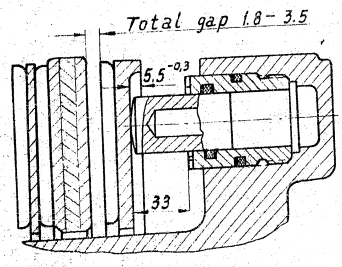

Fig.5. Piston Travel at Brake Shoes Complete Wear (with brake released)

Declassified in Part - Sanitized Copy Approved for Release 2011/12/14 : CIA-RDP80T00246A064200070001-1

Declassified in Part - Sanitized Copy Approved for Release 2011/12/14 : CIA-RDP80T00246A064200070001-1

WHEEL WITHOUT BRAKE

Model K120/1

DESCRIPTION AND [illegible]

INSTRUCTIONS

Declassified in Part - Sanitized Copy Approved for Release 2011/12/14 : CIA-RDP80T00246A064200070001-1

Declassified in Part - Sanitized Copy Approved for Release 2011/12/14 : CIA-RDP80T00246A064200070001-1

WHEEL WITHOUT BRAKE

Model K292/1

DESCRIPTION AND OPERATION INSTRUCTIONS

Declassified in Part - Sanitized Copy Approved for Release 2011/12/14 : CIA-RDP80T00246A064200070001-1

Declassified in Part - Sanitized Copy Approved for Release 2011/12/14 : CIA-RDP80T00246A064200070001-1

DESCRIPTION AND OPERATION INSTRUCTIONS

Wheel, 900x300, without bearings, Model K292/1

PURPOSE

The K292/1 wheel, 900x300 without brakes (not fitted with bearings) intended for mounting a tyre is fitted to the nose L.G$_w$ to mit the aircraft to run at take-off, landing and taxying.

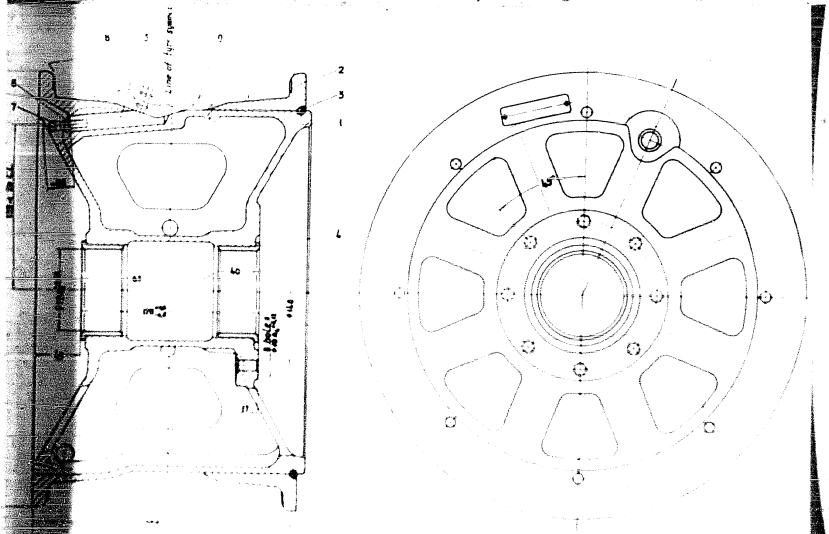

Drum; 2 - wheel flange; 3 - locking half ring; 4 - bushing; - inflation valve; 6 - nut; 7 - cap; 8 - tyre; 9 - pin.

PRINCIPAL TECHNICAL DATA

yre operating pressure ..... $P_o = 5^{+0.2}_{-0.1}$ kg./cm^2

heel weight (without tyre) ..... 13.7 kg.

Declassified in Part - Sanitized Copy Approved for Release 2011/12/14 : CIA-RDP80T00246A064200070001-1

Declassified in Part - Sanitized Copy Approved for Release 2011/12/14 : CIA-RDP80T00246A064200070001-1

D E S I G N

The wheel 900x300 (Fig.1) is a cast magnesium alloy drum (1) with a removable flange (2) which is provided to facilitate mounting the tyre (8).

The removable wheel flange is attached to the drum by the locking half rings (3). The wheel is not fitted with bearings because the wheel is rigidly attached to the axle and rotates together with the axle.

Pressed in the drum hub are two steel bushings (4) through which the wheel axle passes.

On the removable wheel flange side is a flange with eight holes of $10.2A_4^{+0.12}$ mm.dia.

The wheel is rigidly attached by this flange (with 8 bolts) to the removable wheel flange splined on the wheel axle.

The drum inner fins (forming cavities) have holes to drain water from the cavities to the lower cavity.

The water drains overboard through the holes drilled in the fixed flange of the wheel.

MOUNTING AND OPERATION INSTRUCTIONS

1. Before mounting the tyre (8) on the wheel remove the shipping pin (9, Fig.1).

When mounting the tyre on the wheel, ensure proper installation of the valve (5) in the drum hub hole.

The 900x300 tyre and tube with KP-01 valve (115°) is mounted on the hub without an adapter pipe.

Turn the tyre tube about the hub till the valve (5) axis aligns with the valve tube hole; insert the valve tube end into the

Declassified in Part - Sanitized Copy Approved for Release 2011/12/14 : CIA-RDP80T00246A064200070001-1

Declassified in Part - Sanitized Copy Approved for Release 2011/12/14 : CIA-RDP80T00246A064200070001-1

hole and screw the nut (6).

After inflating the tyre up to the operating pressure, tighten the nut (6) so that the valve end with a fully screwed cap protrudes about 25 mm.

Excessive tightening of the nut is not permitted to prevent damage to the tyre tube.

The valve cap is not permitted to protrude beyond the wheel limits.

Then test the valve (5) for air tightness and manually screw the cap (7) on the valve tube end.

2. Before mounting the wheel on the axle, bolt the axle removable flange to the wheel.

3. Mount the wheel together with the axle removable flange on the axle (assembled with the nose L.G. strut) so that the flange enters the axle splines.

NOTE: Mount or remove the wheel only with the aircraft jacked.

4. Tighten the wheel by the axle nut. Lock the nut to prevent its turning.

5. Use a special puller when mounting or removing the tyre.

6. Perform periodic inspections of the wheels after every 50 landings of the aircraft.

When inspecting check the wheel and its parts for condition and check the wheel-to-axle attachment for security.

Declassified in Part - Sanitized Copy Approved for Release 2011/12/14 : CIA-RDP80T00246A064200070001-1

Declassified in Part - Sanitized Copy Approved for Release 2011/12/14 : CIA-RDP80T00246A064200070001-1

PUMP RELIEF VALVE

Model TA77H

DESCRIPTION AND OPERATING INSTRUCTIONS

Declassified in Part - Sanitized Copy Approved for Release 2011/12/14 : CIA-RDP80T00246A064200070001-1

Declassified in Part - Sanitized Copy Approved for Release 2011/12/14 : CIA-RDP80T00246A064200070001-1

PUMP RELIEF VALVE

Model TA77H

DESCRIPTION AND OPERATING INSTRUCTIONS

Declassified in Part - Sanitized Copy Approved for Release 2011/12/14 : CIA-RDP80T00246A064200070001-1

Declassified in Part - Sanitized Copy Approved for Release 2011/12/14 : CIA-RDP80T00246A064200070001-1

I. PURPOSE

The TA77H unit is a pump relief slide valve with two-stage servo action.

The unit is designed to change the pump for idle travel (pump relief), when the maximum preset pressure is obtained in the hydraulic system and to change the pump for operation for the hydraulic system (pump loading), when the pressure in the hydraulic system decreases below the maximum preset value, thus the pump relief valve maintains the pressure in the aircraft hydraulic system within the required limits.

A hydraulic accumulator must be provided in the system fitted with the pump relief valve.

Should the pump relief valve fail pressure increase in the hydraulic system is restricted by the safety valve mounted in the pump casing with the pump relief valve.

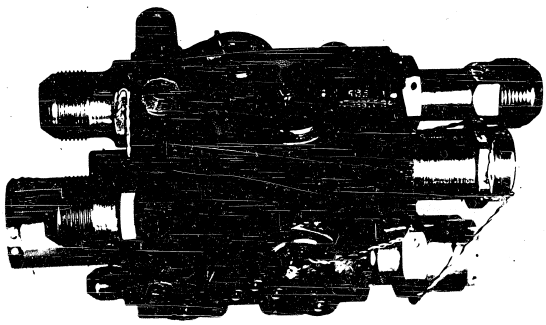

Fig.1. TA77H - Pump relief valve

Declassified in Part - Sanitized Copy Approved for Release 2011/12/14 : CIA-RDP80T00246A064200070001-1

Declassified in Part - Sanitized Copy Approved for Release 2011/12/14 : CIA-RDP80T00246A064200070001-1

II. TECHNICAL DATA

1. Operating fluid AMT-10

2. Regulation data at an ambient air and operating fluid temperature of +20 ± 10°C.

   a) Pump relief pressure P_1 ..... 155 ± 5 kg/cm^2

   b) Pump loading pressure P_2 ..... 120 ± 5 kg/cm^2

   c) Pressure difference P_1-P_2 ..... not less than 30 kg/cm^2

   d) Safety valve opening pressure P_k = 170^{+10} kg/cm^2

   e) Pressure maintained by the safety valve with 40 litres/min fluid consumption through it ..... not more than 155 kg/cm^2

   f) Safety valve closing pressure P ..... not less than 145 kg/cm^2

3. Permissible pump relief valve capacity ..... not more than 80 litres/min.

4. Pressure drop in the relief valve, with the pump capacity of 40 litres/min and a temperature of +20°C:

   a) when charging the hydraulic accumulator ..... not more than 4 kg/cm^2

   b) when by-passing the fluid into the return line .. not more than 40 kg/cm^2

5. Leakage into the return line through the slide valve couple clearances at a pressure of 4[illegible] and a temperature of +20° and +50°C

Declassified in Part - Sanitized Copy Approved for Release 2011/12/14 : CIA-RDP80T00246A064200070001-1

Declassified in Part - Sanitized Copy Approved for Release 2011/12/14 : CIA-RDP80T00246A064200070001-1

a) when charging the hydraulic
accumulator for a new pump
relief valve ..... not more than 400cm^3 for 3min.
at the end of the guaranteed
service life .....not more than 800 cm^3 for 3min.

b) from the locked hydraulic
accumulator for a new pump
relief valve ..... not more than 20 cm^3 for 3 min.
at the end of the guaranteed
service life ..... not more than 40 cm^3 for 3 min.

NOTE: At a temperature of +60°C leakage may increase not more than 1.5 times.

6. Ambient air temperature
range ..... -60°C to +60°C.
Maximum temperature of
operating fluid ..... +70°C

7. Weight dry ..... 3 kg.

8. Guaranteed service life -
aircraft service life in flying hours within one year.

The pump relief valve guaranteed service life does not include shipment and depot storage for 6 months.

NOTES: 1. After keeping the pump relief valve in operating fluid at an ambient air temperature of -60°C for a long period of time permitted are: the P_1 pump switching on pressure increase by 15 kg/cm^2 and P_2 pump switching on pressure decrease by 20 kg/cm^2 the safety valve opening pressure and maintaining pressure increase by 15 kg/cm^2

2. After keeping the pump relief valve in operating fluid at an ambient air temperature of +60°C

Declassified in Part - Sanitized Copy Approved for Release 2011/12/14 : CIA-RDP80T00246A064200070001-1

Declassified in Part - Sanitized Copy Approved for Release 2011/12/14 : CIA-RDP80T00246A064200070001-1

permitted are: the pump switching off pressure decrease and decrease in difference between the pump switching on and switching off pressures by 5 kg/cm^2, the safety valve opening pressure decrease by 3 kg/cm^2 and the maintaining pressure increase by 5 kg/cm^2.

3. At the back pressure in the pump relief valve return line, the safety valve opening and maintaining pressures increase by the back pressure value. Permissible back pressure is not more than 20 kg/cm^2.

4. By the end of the guaranteed service life the safety valve opening pressure is permitted to increase by 5 kg/cm^2.

5. The "FROM THE ACCUMULATOR" pipe connection should be connected to the accumulator by a special pipeline.

6. The pump relief valve vent pipe connection should be connected to the tank by a special pipeline.

7. The pump switching on and switching off pressures values are given for the ratings of charging and discharging the accumulator for a period not less than 1 sec. and charging the accumulator for a period not more than 15 sec.

III. BRIEF DESCRIPTION OF DESIGN (See Fig.2)

The ГА77Н pump relief valve is a combination of two units mounted in the same casing:

1. Pump relief valve and
2. Safety valve.

The pump relief valve consists of four units: sensing element (pressure switch), intermediate slide valve, servo valve (actuating element) and non-return valve.

Declassified in Part - Sanitized Copy Approved for Release 2011/12/14 : CIA-RDP80T00246A064200070001-1

Declassified in Part - Sanitized Copy Approved for Release 2011/12/14 : CIA-RDP80T00246A064200070001-1

The safety valve is provided with servo action and consists of two units: ball valve (pressure switch) and servo piston.

All the units are placed in the casing (1) of aluminium alloy, in the cross-section given in Fig.2 they are located as follows:

a) pump relief valve pressure switch (below)

b) intermediate slide valve

c) servo valve of pump relief valve unit

d) non-return valve

e) safety valve (pressure switch and servo piston).

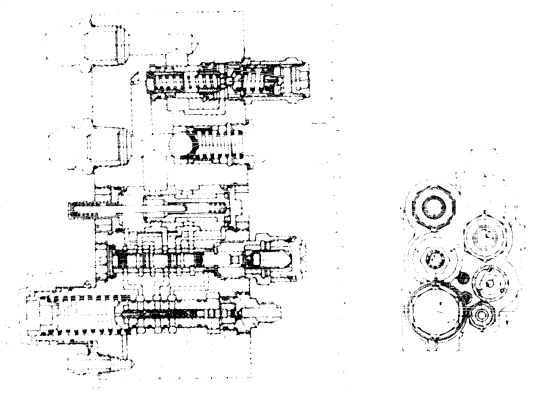

Fig. 2. Pump Relief Valve. Design

Declassified in Part - Sanitized Copy Approved for Release 2011/12/14 : CIA-RDP80T00246A064200070001-1

Declassified in Part - Sanitized Copy Approved for Release 2011/12/14 : CIA-RDP80T00246A064200070001-1

Pump Relief Valve Pressure Switch

The main elements of the pump relief valve are: slide valve (3), barrel (5), plunger (2), supports (6 and 64), spring (7), cap (11) and pipe connection (61).

The steel cemented barrel (5) is inserted into the casing boring and is pressed to the boring end by the pipe connection (61). Fitted to the barrel with a small clearance are the slide valve (3) and plunger (2).

On the left end of the slide valve (3) through the support (6) acts the spring (7) which through the support (12) rests against the cap (11). The spring (7) tension is adjusted by the cap which is secured by the spring lock (8).

The cavity with the spring (7) communicates through the "vent" pipe connection (9) with the tank by a separate pipeline. Pressure from the accumulator is supplied to the pipe connection (61).

The barrel (5) has four rows of drilled holes. The extreme right row of drilled holes communicates with the return line.

The extreme left row of drilled holes communicates with the cavity, which extends to the left end of the intermediate slide valve (56).

The second left row of drilled holes communicates with the cavity which extends to the "Pump" pipe connection (25).

The second right row of drilled holes communicates with the cavity which extends to the right end of the slide valve (56).

All the above connections of the barrel holes with the proper cavities are accomplished by boring and drilling in the casing (1).

Declassified in Part - Sanitized Copy Approved for Release 2011/12/14 : CIA-RDP80T00246A064200070001-1

Declassified in Part - Sanitized Copy Approved for Release 2011/12/14 : CIA-RDP80T00246A064200070001-1

Intermediate Slide Valve

The main elements of the intermediate slide valve are: barrel (58), slide valve (56) and lock. The lock consists of a bent plate spring (53), stop (54) and half-rings (57).

The steel cemented barrel (58) is pressed in the casing barrel, and fitted to the barrel with a small clearance is the slide valve (56).

Pressed to the barrel left end by the nut (16) is the washer (15) which restricts the slide valve (56) travel.

The slide valve right end enters the half-rings (57) which expand the ends of the plate spring (53) and rest against the stop (54).

The plug (50) covers the casing boring and rests against the barrel (58). The plug (50) presses the half-rings (57), stop (54) and spring (53) to one another and to the end of the plug (50) boring.

The lock protects the slide valve (56) from displacement in case of vibrations and jerks.

When the slide valve moves to the extreme right position it presses the half-rings (57) and moves them apart.

Moving apart, the half-rings release the ends of the plate spring (53) and the slide valve moves to the extreme right position.

When the slide valve moves back to the extreme left position in the way similar to that described above.

The barrel (58) has five rows of drilled holes. The middle row of drilled holes communicates with the pump by drilling and boring in the casing.

Pump Relief Valve Servo Valve

The elements of the servo valve are: barrel (23), piston (48), spring (21), lock (22), cup (20), plug (49) and nut (19).

Declassified in Part - Sanitized Copy Approved for Release 2011/12/14 : CIA-RDP80T00246A064200070001-1

Declassified in Part - Sanitized Copy Approved for Release 2011/12/14 : CIA-RDP80T00246A064200070001-1

The steel cemented barrel (23) is pressed in the casing, fitted to the barrel with a small clearance is the piston (48), which in extreme positions rests against the cup (20) and the plug (49). The cup and the plug are pressed to the barrel by the nuts (19).

The lock (22) is used as a guide for the spring (21).

When the fluid pressure is equal to zero or the cavity at the piston (48) right end communicates with the return line, the spring (21) moves the piston (48) to the extreme right position. The piston (48) wide band has slots on the right side, which, with the slide valve moving to the left, permit opening the barrel section gradually; this prevents a hydraulic impact which can occur when sharply opening the large section.

The cavities on both sides of the piston communicate with the holes in the barrel (58) by drilling in the barrel (23) and casing (41). The holes in the barrel (23) which, with the piston (48) in the extreme right position, are closed with its wide left band, reach the casing boring which communicates through a wide section passage to the "PUMP" pipe connection (25).

The second row of holes in the barrel (23) reach the boring which communicates with the vent pipe connection (29).

This boring is also reached by the casing drilled holes which communicate with the two rows of holes in the barrel (58).

Non-Return Valve

The non-return valve consists of the ball (24), bushing (47), spring (46) and pipe connection (44).

The bushing (47) is set in the boring and serves as support for the ball.

Declassified in Part - Sanitized Copy Approved for Release 2011/12/14 : CIA-RDP80T00246A064200070001-1

Declassified in Part - Sanitized Copy Approved for Release 2011/12/14 : CIA-RDP80T00246A064200070001-1

The spring (46) through the bushing (47) presses the ball to the seat in the casing and thus prevents the "TO ACCUMULATOR" cavity from communicating with the "PUMP" cavity.

The spring is guided along the outer diameter in the bushing and boring of the pipe connection (44).

The pipe connection (44) closes the non-return valve cavity and is connected to the accumulator.

Safety Valve

The safety valve pressure switch consists of the steel seat (34), steel ball (36), spring (43), supports (37) and (39), adjusting screw (40), locking washer (38) and sleeve (35).

The adjusting screw (40) which adjusts the pressure switch spring tension, is screwed in the sleeve (35) and secured with the washer (38). The bent ends of the washer enter the slots of the sleeve (35) and projections in the middle part of the washer enter the splines along the screw (40) axis, preventing its self-unscrewing.

The sleeve is covered with the plug (41). The servo piston steel segmented barrel (26), placed into the casing boring with a small clearance, is pressed to the end of the casing boring by the nut (32). Fitted to the barrel with a small clearance is the piston (28) which has a small throttle hole through which the "PUMP" cavity communicates with the inner cavity of the barrel (26).

The left part of the piston (28) has shaped slots which permit fully opening the valve gradually, this prevents vibration which can occur, when sharply opening the valve.

The spring (27) releases the piston (28) to the extreme left position; the spring right end rests against the seat (34), which in its turn rests against the sleeve (35).

Declassified in Part - Sanitized Copy Approved for Release 2011/12/14 : CIA-RDP80T00246A064200070001-1

Declassified in Part - Sanitized Copy Approved for Release 2011/12/14 : CIA-RDP80T00246A064200070001-1

Pressed to the seat by the spring (43) through the support (37) is the ball.

The barrel (26) has holes connecting the barrel inner cavity to the return line. Rubber sealing rings and aluminium washers are used for inner and outer sealing of the safety valve.

The low pressure cavities are sealed with the ring (10 and 12) and aluminium washers (33, 42,45). The high pressure cavities are sealed with the rings (4, 13, 17, [illegible], 31, 52, 60 and 62). Some high pressure cavities sealings have also rings of fluoric elastic (14, [illegible], 51, [illegible], 63) which protect the rubber ring and prevent it from entering the clearance between the sealed parts.

IV. PRINCIPLE OF OPERATION

(See Fig. 2 and 3)

To increase the pressure in the accumulator up to the value P_1 kg/cm^2 (pressure of the pump changing for idle travel), the plunger (2) overcomes the spring (7) force and moves the slide valve (3) to the left. The fluid flows from the pump through the slide valve (3) groove under the intermediate slide valve (56) left end and moves it to the right. The intermediate slide valve moves and connects the pump, cavity to the cavity aft of the piston (48) end. The piston (48) is moved by pressure to the left connecting the pump cavity with the return line cavity.

In the case the pump relief valve operates for the return line and the pump is unloaded. With the pressure in the accumulator decreases, the spring (7) pulls the slide valve (3) with the plunger (2) to the right. The fluid passes from the pump cavity under the intermediate valve (56) right end and moves it to the left. With the intermediate slide valve moving to the left, the cavity aft of the

Declassified in Part - Sanitized Copy Approved for Release 2011/12/14 : CIA-RDP80T00246A064200070001-1

Declassified in Part - Sanitized Copy Approved for Release 2011/12/14 : CIA-RDP80T00246A064200070001-1

piston (48) right end is disconnected from the "PUMP" cavity and connected to the "TANK" pipe connection (29).

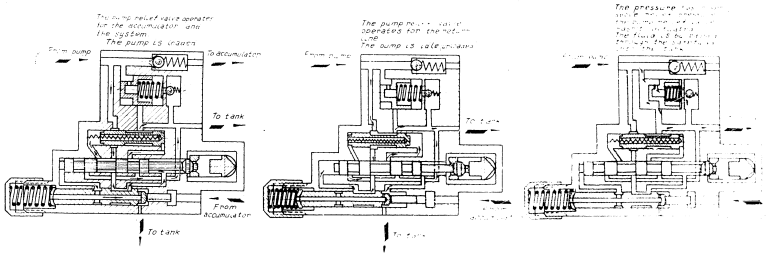

Fig.3. Diagram of PA77H Pump Relief Valve Operation

Pressure is applied to the cavity aft of the piston (48) left end. The piston (48) is moved by the pressure to the right and disconnects the "PUMP" cavity from the return line. In this case the pump relief valve operates for the system and accumulator. The pump is loaded. If with the pressure increase up to the value P_1 the pump relief valve has not actuated and has not connected the pump to the vent line, the pressure in the hydraulic system rises above P_1 and, having reached, the value P_K (exceeding the relief pressure), opens the safety valve thus connecting the pump to the return line.

In this case the safety valve operates as follows: When pressure in the system reaches the value P_K, it overcomes the force of the valve-pressure switch spring (43), and lifts the ball from the seat by-passing the fluid from the piston (28) inner cavity to the tank.

Declassified in Part - Sanitized Copy Approved for Release 2011/12/14 : CIA-RDP80T00246A064200070001-1

Declassified in Part - Sanitized Copy Approved for Release 2011/12/14 : CIA-RDP80T00246A064200070001-1

With further slight pressure increase in the cavity communicating with the pump, the fluid flow through the ball valve increases. The fluid passes through the ball valve having passed through the throttle hole in the piston (28).

The excess of the ball valve opening pressure (P_k) drops in the piston (28) throttle hole and partly in the slot under the ball. Thus pressure difference between the cavities inside and outside the piston is obtained. When the force, caused by this difference and acting on the piston from the left to the right, exceeds the spring (27) force, the piston moves to the right and starts by-passing the fluid from the "PUMP" cavity to the "TANK" cavity maintaining the preset pressure.

V. OPERATING INSTRUCTIONS

INSTALLING THE PUMP RELIEF VALVE IN AIRCRAFT

Before installing in the aircraft, depreserve the pump relief valve as specified in the certificate or in the proper section of this description.

After depreservation, examine the pump relief valve for presence of the locking and seals, installed at the Mfr's plant, and for no damage of the pipe connections threads and pipe connection cones.

Next, install the pump relief valve in the proper place and connect the pipelines to the pipe connections using coupling nuts.

When tightening the coupling nuts, hold the pipe connections with a wrench.

Thoroughly wash the hydraulic pipes and blow them out with air to prevent the pump relief valve contamination.

Place a fine filter between the relief valve and the pump, to

Declassified in Part - Sanitized Copy Approved for Release 2011/12/14 : CIA-RDP80T00246A064200070001-1

Declassified in Part - Sanitized Copy Approved for Release 2011/12/14 : CIA-RDP80T00246A064200070001-1

prevent hard particles from getting into the relief valve, as it may result in affecting the relief valve operation and even in its failure.

After installing the pump relief valve, ensure that the nuts are locked and in the event of vibration the pipes, laid adjacent to the relief valve, will not touch it.

The overall and installation dimensions of the pump relief valve are given in Fig.4.

The TA-77H pump relief valves are interchangeable having the same mounting face and the same pipe connections.

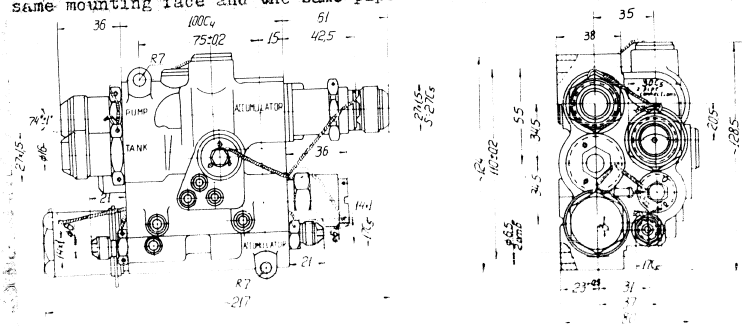

Fig.4. Overall and Installation Dimensions of TA-77H Pump Relief Valve

OPERATING THE PUMP RELIEF VALVE

1. Use AMT-10 oil as operating fluid for the pump relief valve. Never use any other fluid.

2. Remove the pump relief valve failed and forward it to the Mfr's plant for repair.

3. Never disassemble the pump relief valve under field conditions.

4. The pump relief valve perfodic maintenance operations are not provided.

Declassified in Part - Sanitized Copy Approved for Release 2011/12/14 : CIA-RDP80T00246A064200070001-1

Declassified in Part - Sanitized Copy Approved for Release 2011/12/14 : CIA-RDP80T00246A064200070001-1

DEPRESERVING THE PUMP RELIEF VALVE

Before installing the pump relief valve in the hydraulic system, depreserve it employing the following procedure:

1. Remove the oil paper in which the unit is wrapped.

2. Remove the external preservation lubricant with a rag dampened in gasoline, but prevent gasoline and preservation lubricant from getting into the pump relief valve inner cavity.

3. Remove the protective caps from the pipe connections and drain the preservation oil.

PRESERVING THE PUMP RELIEF VALVE

When removing the pump relief valve for its repair or storage for a period of time not exceeding 1 year, depreserve it as follows:

1. Fully drain the operating fluid from the pump relief valve.

2. Wash the relief valve under pressure with 2 or 3 volumes of fresh AMT-10 oil.

3. Fill all the inner cavities of the pump relief valve with fresh AMT-10 oil.

W A R N I N G!

a) Never use for preservation the oil used for washing the pump relief valve.

b) Prevent water from getting in the preservation oil.

4. Tightly close all the pipe connections with protective plugs so that the oil would not flow out or evaporate.

5. Coat the unit outer surface with technical neutral vaseline.

6. Wrap the pump relief valve with two layers of paraffine paper and tie it with a cord. Perform the preservation not later than 8 hours after the pump relief valve is removed from the aircraft.

Declassified in Part - Sanitized Copy Approved for Release 2011/12/14 : CIA-RDP80T00246A064200070001-1

Declassified in Part - Sanitized Copy Approved for Release 2011/12/14 : CIA-RDP80T00246A064200070001-1

WIPER DRIVE MECHANISM

Model TA211-00-1

INSTALLATION AND OPERATING INSTRUCTIONS

Declassified in Part - Sanitized Copy Approved for Release 2011/12/14 : CIA-RDP80T00246A064200070001-1

Declassified in Part - Sanitized Copy Approved for Release 2011/12/14 : CIA-RDP80T00246A064200070001-1

Declassified in Part - Sanitized Copy Approved for Release 2011/12/14 : CIA-RDP80T00246A064200070001-1

Declassified in Part - Sanitized Copy Approved for Release 2011/12/14 : CIA-RDP80T00246A064200070001-1

D E S C R I P T I O N

PURPOSE

The ГА2II-00-I (Fig.1,2) is a drive mechanism designed for moving the wipers which remove atmospheric precipitation from the windscreen.

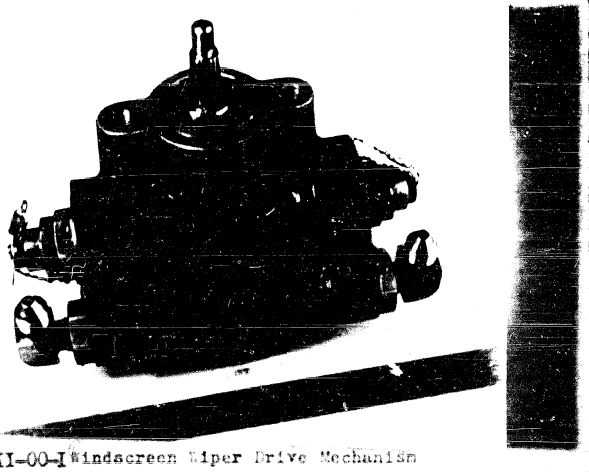

Fig.1. ГА2II-00-I Windscreen Wiper Drive Mechanism
External View

TECHNICAL DATA

Operating fluid АМГ-10

Operating ambient temperature range ..... +60°C to -25°C.

NOTE: The drive mechanism should reliably operate and be tight at a temperature to -60°C.

The windscreen wiper drive operates in the hydraulic system having a pressure up to 155 kg./cm^2.

PURPOSE

Max. pressure in return line ..... 5 kg./cm^2

Number of drive shaft double turns per minute, recommended for operation ..... from 100 to 220

Declassified in Part - Sanitized Copy Approved for Release 2011/12/14 : CIA-RDP80T00246A064200070001-1

Declassified in Part - Sanitized Copy Approved for Release 2011/12/14 : CIA-RDP80T00246A064200070001-1

Max. number of shaft double turns ..... 240 turns per min.

Operating torque produced by the drive.....90-110 kg.-cm.

At a pressure of 145-155 kg/cm^2 in the system and within a temperature range of +60°C to -25°C the drive mechanism overrides torque at starting ..... 150 kg.-cm.

The angle of the drive turn at 200 double travels per min. and a load of 90-110 kg.-cm... 68±6°

Guaranteed service life ..... 250 flying hours within 5 years.

Fluid consumption through the drive mechanism at 200 double travels per min. at the end of the guaranteed service life..... not more than 2,000 cm^3/min.

Weight ..... 1.7 kg.

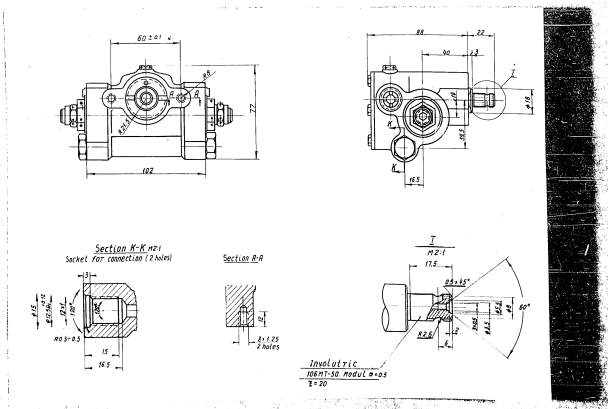

Fig.2. Overall Dimensions of TA2II-00-I Windscreen Wiper Drive Mechanism

Declassified in Part - Sanitized Copy Approved for Release 2011/12/14 : CIA-RDP80T00246A064200070001-1

Declassified in Part - Sanitized Copy Approved for Release 2011/12/14 : CIA-RDP80T00246A064200070001-1

Max. number of shaft double turns ..... 240 turns per min.

Operating torque produced by the drive.....90-110 kg.-cm.

at a pressure of 145-155 kg/cm^2 in the system and within a temperature range of +60°C to -25°C the drive mechanism overrides torque at starting ..... 150 kg.-cm.

The angle of the drive turn at 200 double travels per min. and a load of 90-110 kg.-cm... 68±6°

Guaranteed service life ..... 250 flying hours within 5 years.

Fluid consumption through the drive mechanism at 200 double travels per min. at the end of the guaranteed service life..... not more than 2,000 cm^3/min.

Weight ..... 1.7 kg.

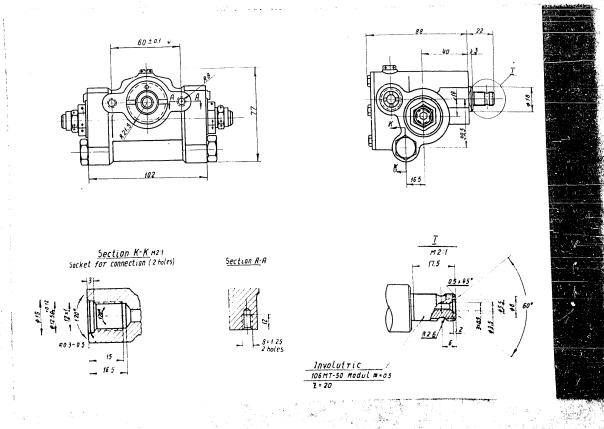

Fig.2. Overall Dimensions of TA2II-00-I Windscreen Wiper Drive Mechanism

Declassified in Part - Sanitized Copy Approved for Release 2011/12/14 : CIA-RDP80T00246A064200070001-1

Declassified in Part - Sanitized Copy Approved for Release 2011/12/14 : CIA-RDP80T00246A064200070001-1

D E S I G N

The TA2II-00-I mechanism consists of the following main parts (Fig.3): cast casing (1) with a pressed-in steel sleeve (2), piston-rack (3) sealed with four pairs of textolite rings (9), gear (4), driven shaft (5), shaft bushings (6), valves (7), distribution bushings (8) and switching-over mechanism

The switching-over mechanism comprises: driving washer (10), with screws (11), bracket (12), plank (13) and spring (14).

The switching-over mechanism is enclosed with the cover (15) sealed with a rubber ring.

The stops (16) restrict the piston travel. When installing the windscreen wiper drive mechanism in the aircraft, remove two shipping plugs screwed in the casing (1) and replace them with two pipe connections, the place a link, actuating wiper, on the end of the driven shaft provided with splines.

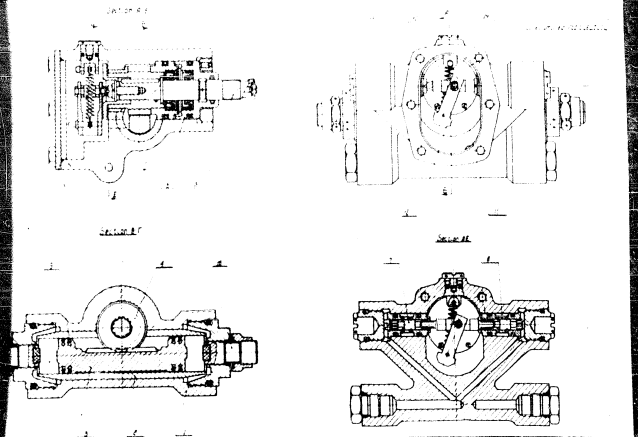

1 - casing; 2 - sleeve; 3 - piston; 4 - gear; 5 - shaft; 6 - bushing; 7 - valve; 8 - bushing; 9 - ring; 10 - washer; 11 - screw; 12 - bracket; 13 - plank; 14 - spring; 15 - cover; 16 - stop.

Declassified in Part - Sanitized Copy Approved for Release 2011/12/14 : CIA-RDP80T00246A064200070001-1

Declassified in Part - Sanitized Copy Approved for Release 2011/12/14 : CIA-RDP80T00246A064200070001-1

PRINCIPLE OF OPERATION

The windscreen wiper drive mechanism operates in conjunction with the TAI7I/I control valve which is connected to the pressure line before the drive mechanism.

The TAI7I/I control valve is designed to reduce the pressure of the fluid before it enters the windscreen wiper drive mechanism and to adjust the number of the wiper travels.

The diagram of the control valve and windscreen wiper drive mechanism connection to the aircraft hydraulic system is shown in Fig.4.

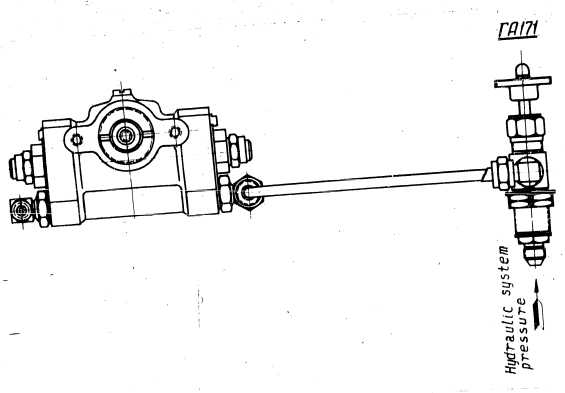

Fig.4. TA2II-00-I Mechanism - to TAI7I/I Valve Connection Diagram

ELITE
ROWE LINE SCALE
FOR MEASURING TYPEWRITING STRO

Declassified in Part - Sanitized Copy Approved for Release 2011/12/14 : CIA-RDP80T00246A064200070001-1

Declassified in Part - Sanitized Copy Approved for Release 2011/12/14 : CIA-RDP80T00246A064200070001-1

Given in Fig.5 is the windscreen wiper drive mechanism operation
gram. The pressure from the system passes through the ГАЗ7I/I
ve to the drive mechanism pressure inlet pipe connection and next
rough the casing drilled holes into the left cavity of the sleeve (13)
e sleeve right cavity is connected by the right valve through the
itch-over mechanism chamber with the return line pipe connection.

Due to this the piston (14) moves from left to right, rotating
nterclockwise the gear (10) and the drive shaft (3) together with the
per link placed on it.

The switch-over mechanism operates as follows: the driving washer
), rotating together with the drive shaft (3) on whose splines it is
aced, rests with the screw (7) against the bracket (8) and turns it
nterclockwise. The spring (6) expands and, overcoming the friction
orce, throws the plank (4) in the other extreme position.

The plank switches over the valves (15) pressed to its both sides
y high pressure. After th t the piston moves in reverse direction.

3 5 4 2

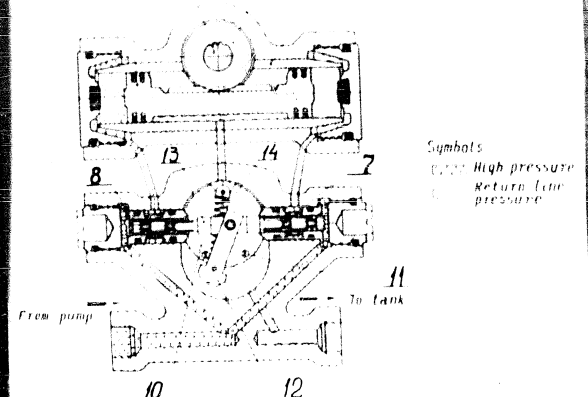

Operation

Declassified in Part - Sanitized Copy Approved for Release 2011/12/14 : CIA-RDP80T00246A064200070001-1

Declassified in Part - Sanitized Copy Approved for Release 2011/12/14 : CIA-RDP80T00246A064200070001-1

INSTALLATION AND OPERATING INSTRUCTIONS

Depreserving the Mechanism

Before installing the unit in the hydraulic system, depreserve it as follows:

1. Remove the oil paper with which the unit is wrapt.

2. Remove external preservation lubricant with a rag dampened in gasoline. When doing this, prevent gasoline and preservation lubricant from getting in the unit casing.

3. Unscrew the shipping plugs and drain the preservation oil.

4. Wash the unit by pumping the operating fluid through it.

5. During the depreservation prevent damage to the locking and seals installed at the Mfr's plant.

Mounting the Mechanism

1. Before mounting the windscreen wiper drive mechanism, examine the locking and seals, installed at the Mfr's plant, for good condition.

2. Screw in the pipe connections and install the mechanism in place.

3. Connect pipes to the pipe connections using the coupling nuts.

4. Choose the length and diameter of the return line pipe so that the pressure downstream of the "Tank" pipe connection of the windscreen wiper drive mechanism does not exceed 5 kg/cm^2.

NOTE: a) When screwing-in the pipeline coupling nuts, hold the pipe connection with a wrench.

b) The system pipes should be free from dirt.

If the mounting procedure requires an extended period(several days) between the unit depreservation and the hydraulic system filling, fill all the pipes and the mechanism with operating fluid (without air) and seal them.

Declassified in Part - Sanitized Copy Approved for Release 2011/12/14 : CIA-RDP80T00246A064200070001-1

Declassified in Part - Sanitized Copy Approved for Release 2011/12/14 : CIA-RDP80T00246A064200070001-1

Operating the Mechanism

...M-10 as operating fluid for the windscreen wiper drive

...screen wiper is started by smoothly opening the
...before switching on the hydraulic system, the TA171/1
...closed.

...the mechanism failed and forward it to a repair shop.
...assemble the mechanism under field conditions.

Periodic Maintenance Operations

...very three months fill the bushings (6) cavity with
...icant through the shaft (3) hole. After filling, close

Preserving the Mechanism

...the mechanism for repair or storage for a period of
...t year, preserve it as follows:
...operating fluid from the mechanism.
...unit under pressure with fresh AMT-10 oil.
...inner cavities with fresh AMT-10 oil.
...washing up, never use the oil used for preser-
...ion.
...vent water from getting into preservation oil.
...fill the pipe connections with protective plugs
...either flow out not evaporate during transporta-

Declassified in Part - Sanitized Copy Approved for Release 2011/12/14 : CIA-RDP80T00246A064200070001-1

Declassified in Part - Sanitized Copy Approved for Release 2011/12/14 : CIA-RDP80T00246A064200070001-1

5. Coat the mechanism outer surface with technical neutral vaseline (TOCT 782-59) and gun lubricant (TOCT 3005-51).

6. Wrap the mechanism with two layers of paraffined paper and tie it with a cord.

Perform preservation not later than eight hours after removing the windscreen wiper drive mechanism

Declassified in Part - Sanitized Copy Approved for Release 2011/12/14 : CIA-RDP80T00246A064200070001-1

Declassified in Part - Sanitized Copy Approved for Release 2011/12/14 : CIA-RDP80T00246A064200070001-1

C O N T E N T S

	Page
Purpose	1
Technical data	1
Design	3
Principle of operation	4
Installation and Operating Instructions	6
Depreserving the Mechanism	6
Mounting the Mechanism	6
Operating the Mechanism	7
Periodic Maintenance Operations	7
Preserving the Mechanism	7

Declassified in Part - Sanitized Copy Approved for Release 2011/12/14 : CIA-RDP80T00246A064200070001-1

Declassified in Part - Sanitized Copy Approved for Release 2011/12/14 : CIA-RDP80T00246A064200070001-1

ELECTRICAL REMOTE-READING

PRESSURE GAUGE

Model 20EMV-3

DESCRIPTION AND OPERATION INSTRUCTIONS

Declassified in Part - Sanitized Copy Approved for Release 2011/12/14 : CIA-RDP80T00246A064200070001-1

Declassified in Part - Sanitized Copy Approved for Release 2011/12/14 : CIA-RDP80T00246A064200070001-1

ELECTRICAL REMOTE-READING

PRESSURE GAUGE

Model 23[illegible]-B

DESCRIPTION AND OPERATING INSTRUCTIONS

Declassified in Part - Sanitized Copy Approved for Release 2011/12/14 : CIA-RDP80T00246A064200070001-1

Declassified in Part - Sanitized Copy Approved for Release 2011/12/14 : CIA-RDP80T00246A064200070001-1

C O N T E N T S

	Page
I. Purpose	2
II. Design	2
УК-2-8 Indicator Design.....	2
Д-8 Transmitter Design	5
III. Technical Data	10
IV. Completing	11
V. Checking Pressure Gauge Operation and Necessary Test Equipment	11
VI. Installation and Operation Instructions.....	19
Installation	19
Operation	21
VII. Periodic Maintenance Operations	22
VIII. Troubles and Remedies	23

Declassified in Part - Sanitized Copy Approved for Release 2011/12/14 : CIA-RDP80T00246A064200070001-1

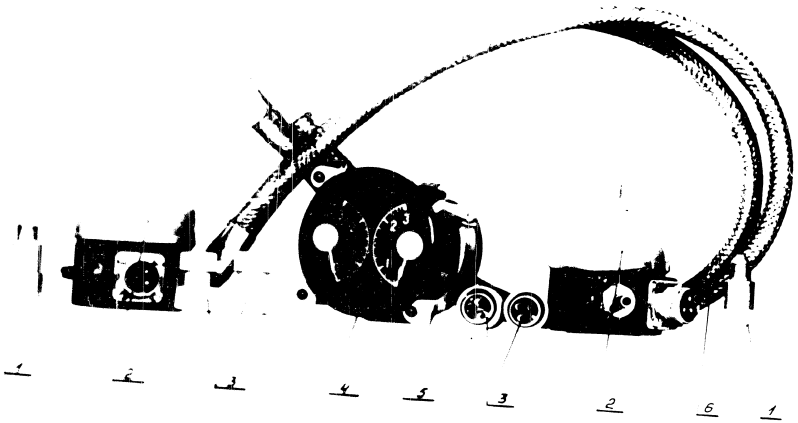

Fig. 1. Pressure Gauge Set

1 - Plate damper; 2 - transmitter; 3 - three-pin plug connector; 4 - indicator; 5 - mounting ring; 6 - flexible hose.

Declassified in Part - Sanitized Copy Approved for Release 2011/12/14 - CIA-RDP80T00246A064200070001-1

Declassified in Part - Sanitized Copy Approved for Release 2011/12/14 : CIA-RDP80T00246A064200070001-1

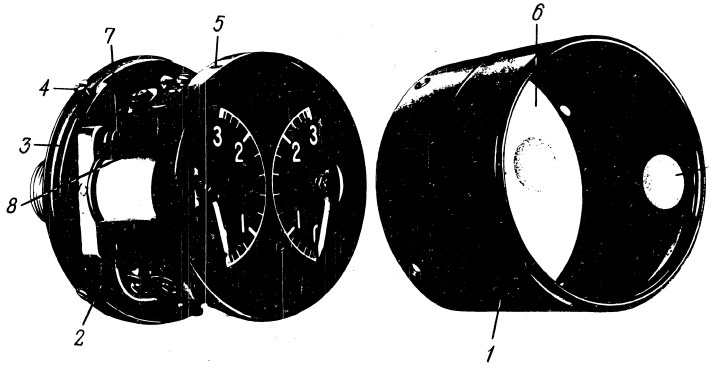

Fig.2. Indicator (with Casing Removed)

1 - Casing; 2 - base; 3 - gasket; 4 - screws; 5 - holder; 6 - glass; 7 - screw; 8 - support.

Declassified in Part - Sanitized Copy Approved for Release 2011/12/14 : CIA-RDP80T00246A064200070001-1

The shaft (2)(Fig.3) with pivots, moving magnet (1), cross (4) with balance weights (5) and pointer (3) form the ratiometer movable assembly. One end of the shaft rests against the step bearing (15) secured in the damper (6). The other end of the shaft rests against the other step-bearing secured in the adjusting screw (16). The moving magnet (1) is located inside the copper damper (6) and closed with the damper cover (13). When the movable assembly oscillates Foucault currents, induced in the damper, brake the movable assembly thus damping the pointer oscillations. The damper is surrounded by two pairs of coils (7) and (8) located at an angle of 120° to each other.

The coils of each pair are parallel to each other and located at a distance of the damper (6) lug and are secured in this position by means of square plates. When the power supply is off the pointer (3) returns to its initial position by an additional stationary magnet (9). The cover (13) and damper (6) are attached by nuts (14) and posts (12).

Fastened to the posts (12) in the front portion of the ratiometer using two screws is the bridge (2). Attached from the rear side by two screws is the cylindric permalloy screen (10) which protects the ratiometer from the interference of outer magnetic fields. Thus the magnetic fields of one ratiometer does not affect the fields of the other ratiometer.

II-3 Transmitter Design

The 23ДМУ-3 pressure gauge set is provided with two identical transmitters.

Kinematic didgram of the transmitter is given in Fig.4 and its design - in Fig.5.

Declassified in Part - Sanitized Copy Approved for Release 2011/12/14 : CIA-RDP80T00246A064200070001-1

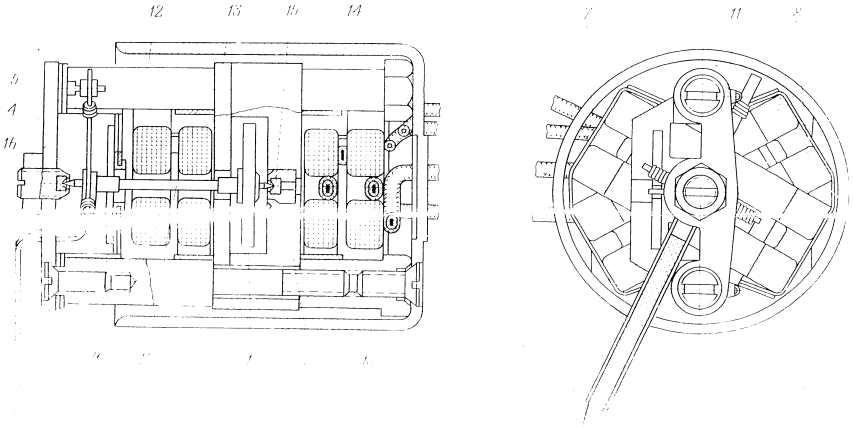

Fig.3. Ratiometer Design

1 - moving magnet; 2 - shaft; 3 - pointer; 4 - cross; 5 - balance weights; 6 - damper; 7 - large [illegible] 8 - small pole; 9 - stationary magnet; 10 - screen; 11 - bridge; 12 - post; 13 - damper [illegible]; 14 - [illegible]; 15 - step bearing; 16 - adjusting screw.

Declassified in Part - Sanitized Copy Approved for Release 2011/12/14 : CIA-RDP80T00246A064200070001-1

Declassified in Part - Sanitized Copy Approved for Release 2011/12/14 : CIA-RDP80T00246A064200070001-1

The sensing element of the transmitter is the corrugated diaphragm (1)(Fig.4) attached between the base (2) and cover (3). Pressure measured is supplied to the cavity under the diaphragm through the connection (4).

With increase in pressure the diaphragm (1) deflects and moves the rod (5) operating one of the arm of the right angle rocker arm (6); in this case the rocker lever turns and its other arm moves the link (7) with the brush holder (8). The link with the brush holder turns in two pivots (9) and the brushes (10) move along the potentiometer (11). With decrease in pressure the transmitter mechanism reverse motion is obtained by the spring (12). Current is supplied to the brushes through the flexible wire (13).

The receptacle (14) pins are connected to the potentiometer ends by a multicore wire in chlorvinyl insulation.

The transmitter mechanism and electrical elements are mounted inside the aluminium splash-proof casing attached to the base by four screws.

To prevent the diagram from being damaged under the action of excessive pressure the adjusting restrictor (15) is provided; the latter is screwed in the base cover (2). The restrictor is adjusted so that the diaphragm corrugated peaks rest against it at a pressure exceeding the maximum measured pressure by 10%. The transmitter is closed with the cover which is secured by a threaded ring.

Declassified in Part - Sanitized Copy Approved for Release 2011/12/14 : CIA-RDP80T00246A064200070001-1

Declassified in Part - Sanitized Copy Approved for Release 2011/12/14 : CIA-RDP80T00246A064200070001-1

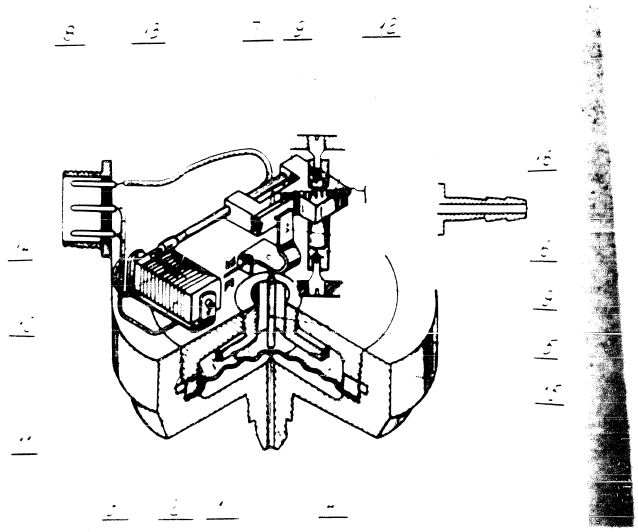

Fig.4. Transmitter kinematic diagram

1 - diaphragm; 2 - base; 3 - cover; 4 - connect. n; 5 - rod;
6 - rocker arm; 7 - link; 8 - brush holder; 9 - rivets; 10 - brush;
11 - potentiometer; 12 - return spring; 13 - flexible wire; 14 - receptacle; 15 - adjustable restrictor; 16 - static connection.

Declassified in Part - Sanitized Copy Approved for Release 2011/12/14 : CIA-RDP80T00246A064200070001-1

Declassified in Part - Sanitized Copy Approved for Release 2011/12/14 : CIA-RDP80T00246A064200070001-1

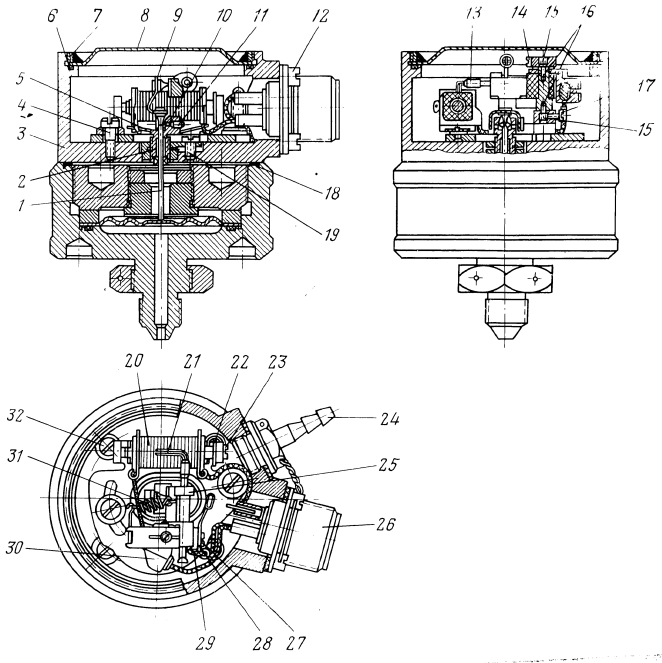

1 - Rod; 2 - block; 3 - casing; 4 - screw; 5 - flat spring; 6 - rubber ring; 7 - threaded ring; 8 - cover; 9 - rocker arm; 10 - rocker arm axle; 11 - locking screw; 12 - screw; 13 - brush holder; 14 - screw; 15 - pivot; 16 - ball; 17 - screw; 18 - sealing gasket; 19 - screw; 20 - potnetiometer; 21 - brushes; 22 - locking washer; 23 - adjusting screw; 24 - static connection; 25 - link with parts; 26 - receptacle; 27 - screw; 28 - stop; 29 - flexible wire; 30 - weight; 31 - spring; 32 - screw.

Declassified in Part - Sanitized Copy Approved for Release 2011/12/14 : CIA-RDP80T00246A064200070001-1

Declassified in Part - Sanitized Copy Approved for Release 2011/12/14 : CIA-RDP80T00246A064200070001-1

III. TECHNICAL DATA

1. Pressure measuring range ..... [illegible] to 3 kg./cm^2.
2. Indicator operating scale range ..... from 0.[illegible] to 2 kg/cm^2.
3. Pressure gauge operates in the ambient temperature range of [illegible] to -60°C.
4. Permissible errors, reading variations of pressure gauges, indicators and transmitters at various tests at a normal temperature.

Table No.1.

Indicator scale [illegible] checked kg/cm^2	Permissible errors		
	Pressure gauge	Indicator	Transmitter
0.[illegible]; 1.[illegible]; 2	±[illegible].[illegible]9	±[illegible]	±[illegible].[illegible]5
[illegible]	±[illegible].18	±0.0[illegible]	±[illegible].08

5. Transmitters [illegible] air tight [illegible] pressure of 10 kg/cm^2.
6. The indicator casing (from the side of the glass) and transmitters casings are splash-proof.
7. The pressure gauge reliably operates at a vibration of 1.5 g for [illegible] indicator and 10 g - for the transmitters in a frequency range of [illegible] to [illegible] c.p.s.
8. The pressure gauge withstands a vibration overload of 1.5 g for the indicator and 10 g - for the transmitters in a frequency range [illegible]0 to 80 c.p.s.
9. The pressure gauge operates from a supply of 27±2.7 v. D.C.
10. Current drawn ..... does not exceed 0.2 a.
11. Insulation resistance of the indicator and transmitters electrical elements at a normal temperature and relative humidity of 30 to [illegible]

Declassified in Part - Sanitized Copy Approved for Release 2011/12/14 : CIA-RDP80T00246A064200070001-1

Declassified in Part - Sanitized Copy Approved for Release 2011/12/14 : CIA-RDP80T00246A064200070001-1

should be not less than 20 megohms.

12. Transmitters and indicators of different pressure gauges are interchangeable.

13. Pressure gauge weight without connecting wires does not exceed 2,000 gr.

14. Overall dimensions of the indicator and transmitters are given in Fig. 6 and 7.

IV. COMPLETING

1. УК-2-3 Indicator ..... 1 ea
2. Д-3 Transmitter ..... 2 ea
3. Attaching ring, 80 mm.dia..... 1 ea
4. Three-pin plug connector ..... 4 ea
5. Damper, ten-plate ..... 2 ea
6. Flexible hose ..... 2 ea
7. Certificate for the Indicator ..... 1 copy
8. Certificate for the Transmitter ..... 2 copies
9. General Certificate ..... 1 copy

V. CHECKING PRESSURE GAUGE OPERATION AND TEST EQUIPMENT

During operation check the 23ДМУ-3 pressure gauge for:

1. Reading error at a normal temperature.
2. Insulation resistance of the indicator and transmitter electrical elements.

The pressure gauge is checked for reading error according to the diagram given in Fig.8.

Declassified in Part - Sanitized Copy Approved for Release 2011/12/14 : CIA-RDP80T00246A064200070001-1

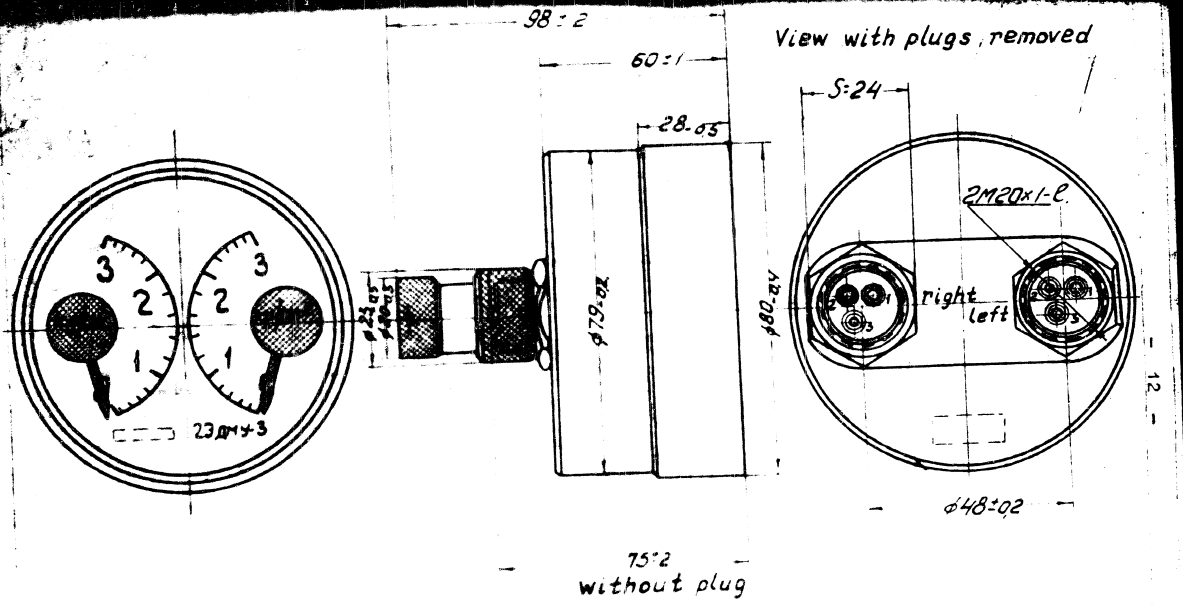

Fig. 1. Indicator overall dimensions

Declassified in Part - Sanitized Copy Approved for Release 2011/12/14 : CIA-RDP80T00246A064200070001-1

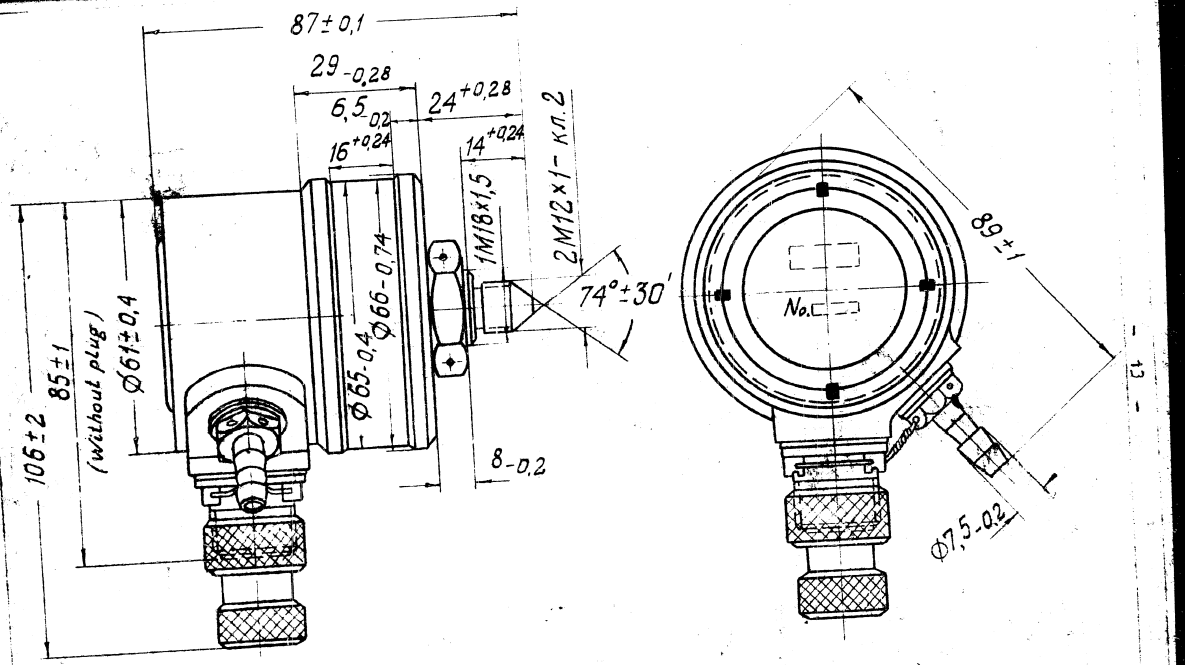

Fig.7. Transmitter Overall Dimensions

Declassified in Part - Sanitized Copy Approved for Release 2011/12/14 : CIA-RDP80T00246A064200070001-1

Declassified in Part - Sanitized Copy Approved for Release 2011/12/14 : CIA-RDP80T00246A064200070001-1

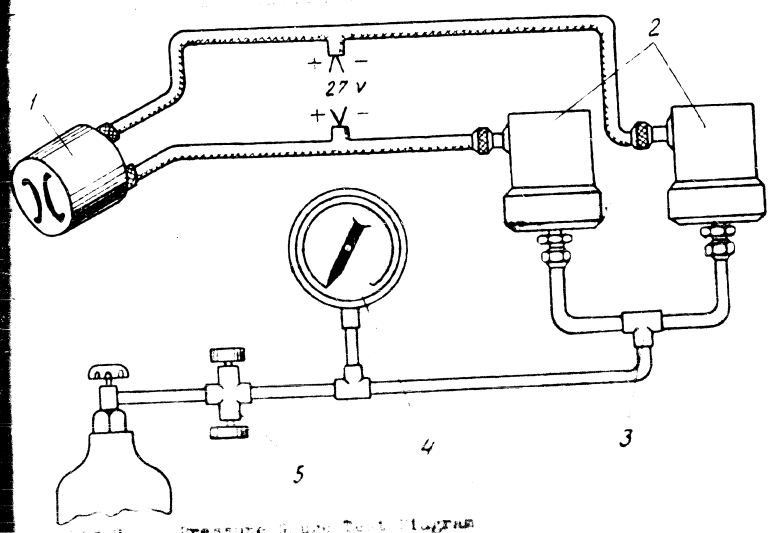

Fig.8. Pressure Gauge Test Diagram

1 - indicator; 2 - transmitter; 3 - tee; 4 - reference pressure gauge; 5 - double-needle valve.

Begin checking from the zero point. Then using the double-needle valve (5) build up in the transmitters a pressure corresponding to the following scale points of the indicator 1, 2 and 3 kg./cm².

The value of pressure built up in the transmitters is checked by a reference pressure gauge (4) with degree of precision not lower than 0.5.

First, check at pressure increase of 2 to 3 kg/cm², keep for 15 min. at a pressure corresponding to the indicator max. scale reading and then decrease pressure and check the pressure gauge readings on the same scale points as at pressure increase.

The pressure gauge reading error on each test points of the indicator scales is determined as a difference between the reading of the pressure gauge tested on the given point and actual value of pressure

Declassified in Part - Sanitized Copy Approved for Release 2011/12/14 : CIA-RDP80T00246A064200070001-1

Declassified in Part - Sanitized Copy Approved for Release 2011/12/14 : CIA-RDP80T00246A064200070001-1

measured by the reference pressure gauge.

Check the instrument at buzzing or at a test vibration overload of 0.1 to 0.3 g for the indicator and 1.5 g for the transmitters.

Supply voltage during the test should be 27 ± 0.5 V, at ambient temperature of +20° ± 5°C.

During operation check the reading errors of the indicator and transmitter separately by means of a special test set. When checking the indicator, this set is used as a transmitter which permits setting the resistance corresponding to resistances divided by the brush on the potentiometer when buidling up definite pressures in the transmitter.

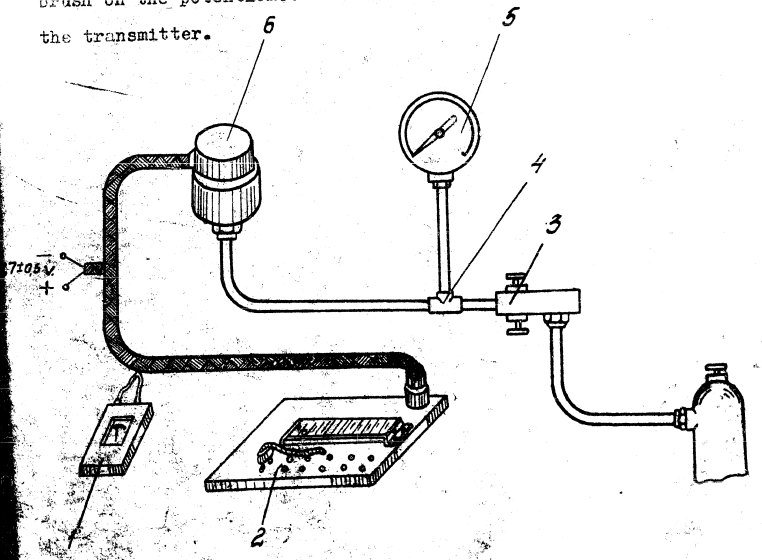

Fig.9. Transmitter Test Diagram

1 - Zero galvanometer; 2 - special test set; 3 - valve; 4 - tee; 5 - reference pressure gauge; 6 - transmitter.

Declassified in Part - Sanitized Copy Approved for Release 2011/12/14 : CIA-RDP80T00246A064200070001-1

Declassified in Part - Sanitized Copy Approved for Release 2011/12/14 : CIA-RDP80T00246A064200070001-1

The transmitter testing is based on the property of a balanced bridge which consists in the following: at a zero current in the zero galvanometer (1) (Fig.9) the currents flowing along the bridge arms are equal.

The arms of the bridge are the transmitter potentiometer and the resistance of the test set.

The test set schematic diagram is given in Fig.10.

The parts of the test set are mounted on a special panel.

Attached to the lower surface of the panel are the resistance coils(1).

The total values of the resistance of each of the 16 pairs of coils (1) are 237 ohms.

Each pair of coils is connected to the terminals 1 and 2 of the test set receptacle; the ends of the coils are connected to 16 pairs of jacks of the upper part of the panel. The indicator and transmitter are checked at the points of 0, 1,2 and 3 kg/cm^2. The test set is graduated from 0 to 3 every 0.2 kg/cm^2. Such a number of divisions is required to adjust and calibrate the indicator measuring elements.

Attached to the upper panel is the potentiometer of 18 ohms. The potentiometer slider (2) is connected to the terminal 3 of the test set plug connector. The potentiometer (4) can be switched on between any pair of resistance coils (1) through the fork (3).

The errors in kg/cm^2 are read on the potentiometer scale (5); the slider (2) moves along the scale. The indicator (Fig.11) readings are first checked on the zero point of one of the indicator scales. To do this, connect the test set fork to the jack marked [illegible] and move the slider along the potentiometer scale till the pointer of the tested pressure gauge element coincides with zero division. The reading error on the zero division is determined by the test set potentiometer scale. Then connect the test set fork in turn to the jacks marked [illegible] 1,2 and 3 kg/cm^2, so that the pointer of the pressure [illegible]

Declassified in Part - Sanitized Copy Approved for Release 2011/12/14 : CIA-RDP80T00246A064200070001-1

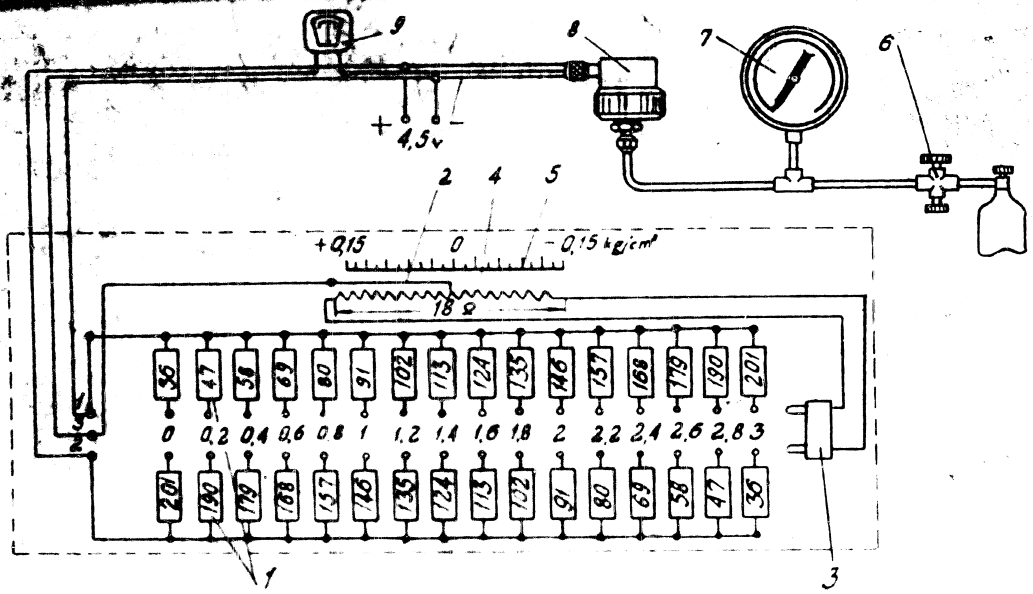

Fig.1. Test set schematic Diagram and Transmitter Connection Diagram

1 – Resistance coils; 2 – slider; 3 – fork; 4 – potentiometer; 5 – scale; 6 – valve;

7 – reference pressure gauge, 8 – transmitter ; 9 – zero galvanometer.

Declassified in Part - Sanitized Copy Approved for Release 2011/12/14 : CIA-RDP80T00246A006200070001-1

Declassified in Part - Sanitized Copy Approved for Release 2011/12/14 : CIA-RDP80T00246A064200070001-1

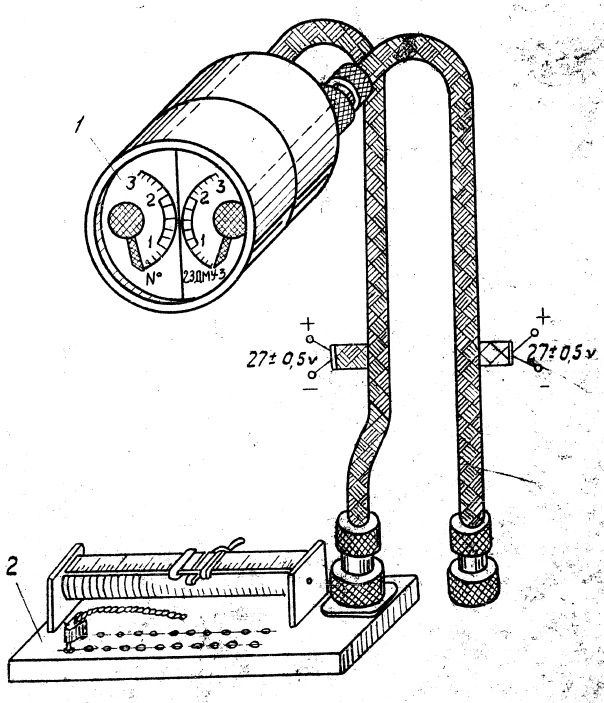

Fig. 11. Indicator Test Diagram

1 - Indicator; 2 - test set.

coincides with the corresponding points of its scale. After de... the reading error on the division .3 kg/cm^2, check in the rev... connecting the test set fork to the jacks marked ... and ...

Check the second measuring element of the pressure ... similar way. During the indicator test, buzzing or test ...

Declassified in Part - Sanitized Copy Approved for Release 2011/12/14 : CIA-RDP80T00246A064200070001-1

Declassified in Part - Sanitized Copy Approved for Release 2011/12/14 : CIA-RDP80T00246A064200070001-1

ambient air temperature and supply voltage should be the same as during the test of the pressure gauge set.

When checking the transmitter (Fig.9) determine its errors at pressure values of 0; 1; 2 and 3 kg/cm^2.

To do this, determine the error on the first point at zero pressure of the on the rest points after building up in the transmitter the corresponding pressure. The value of the error at each pressure value is determined by the test set potentiometer scale after the pointer of the zero galvanometer (1) coincides with the zero division of its scale.

The values of buzzing or test vibration, ambient air temperature and supply voltage during the transmitter test are given in Section V.

The resistance of the indicator and transmitter electrical elements insulation is determined at a normal temperature and relative humidity of 60 to 80% using the megger of 500 V,A.C.

One wire of the megger is in turn connected to the short-circuited terminals of the indicator and transmitter receptacle and the other - to the indicator or transmitter casings.

VI. INSTALLATION AND OPERATION INSTRUCTIONS

Installation

The УК-2-3 indicator is installed on the instrument panel in the group of the engine fuel system instruments. The indicator is attached by a standard mounting ring 60 mm.dia.

Temperature and vibration in the place of the indicator and transmitters installation should not exceed values indicated in Section III.

The transmitters are attached to a special bracket by a nut (1M18 x 1,5) or clamp.

Declassified in Part - Sanitized Copy Approved for Release 2011/12/14 : CIA-RDP80T00246A064200070001-1

Declassified in Part - Sanitized Copy Approved for Release 2011/12/14 : CIA-RDP80T00246A064200070001-1

The pressure measured is supplied to the transmitters through special 10-plate dampers using the flexible hoses. The plate damper is intended to damp a pulsating pressure (caused by pulsing of the pressure measured) at the transmitter inlet. With no plate damper the transmitter potentiometer coils can be damaged by the brushes due to pressure pulsation.

The dampers are provided with the inner thread. They are screwed on the transmitter connections whose ends are provided with external thread, and connected to the flexible hoses by the cone.

The indicator is connected to the transmitter and supply source according to the connection diagram (Fig.12).

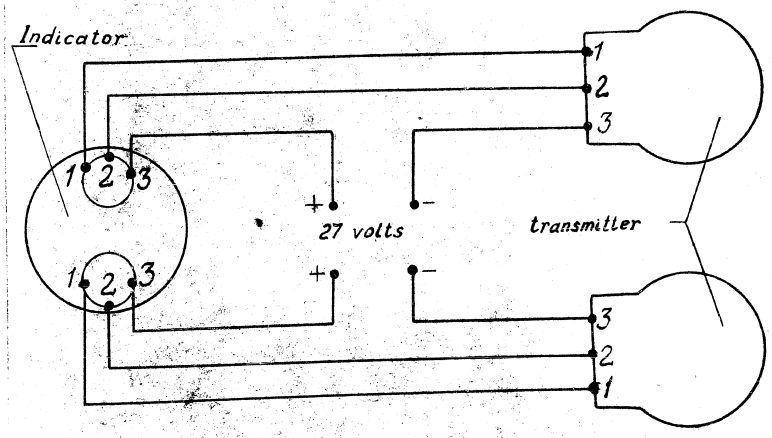

Fig.12. Connection Diagram

Declassified in Part - Sanitized Copy Approved for Release 2011/12/14 : CIA-RDP80T00246A064200070001-1

Declassified in Part - Sanitized Copy Approved for Release 2011/12/14 : CIA-RDP80T00246A064200070001-1

Connect wires to the plug connectors according to the wiring diagram and figures marked on the plug connectors blocks.

After installing the pressure gauge check its operation. With the instrument energized and at zero pressure the indicator pointers ends should be against zero divisions of the scales. With increase in pressure the indicator pointers should move indicating pressure increase in the system. With the supply OFF the indicator pointers should be against the stops below the scale zero divisions. After checking the pressure gauge operation secure all the coupling nuts with wire.

Operation

During operation check the readings of the pressure gauge or separately the indicator and transmitter in the terms given in Section II.

Simultaneously check the resistance of the indicator and transmitter electrical elements insulation. Check the transmitter, flexible hoses supplying pressure to the transmitter and transmitter and indicator plug connectors for security of attachment. If the pressure gauge operates improperly find its defect. To do this, replace the pressure gauge units with the serviceable indicator and transmitters as the indicator and transmitters of the 23ИУ-5 pressure gauge are interchangeable with the indicators and transmitters of other pressure gauges. After replacing furnish the 23ИУ-5 pressure gauge additional certificate with a new certificate for the indicator or transmitter instead of the Certificate for the faulty indicator or transmitter. Check the pressure gauge at a normal temperature and enter the readings in the general certificate.

Declassified in Part - Sanitized Copy Approved for Release 2011/12/14 : CIA-RDP80T00246A064200070001-1

Declassified in Part - Sanitized Copy Approved for Release 2011/12/14 : CIA-RDP80T00246A064200070001-1

VII. PERIODIC MAINTENANCE OPERATION

Perform periodic maintenance operations not less than once every three months.

During the 2DMV-3 pressure gauge operation check its reading errors and resistance of the indicator and transmitter electrical elements insulation.

The indicator and transmitters errors may be checked separately. The instructions for checking the pressure gauge, indicator and transmitters are given in Section V.

Declassified in Part - Sanitized Copy Approved for Release 2011/12/14 : CIA-RDP80T00246A064200070001-1

Declassified in Part - Sanitized Copy Approved for Release 2011/12/14 : CIA-RDP80T00246A064200070001-1

VIII. TROUBLES AND REMEDIES

No.	Trouble	Probable Cause	Remedy
1.	With instrument energized pointer rests against lower stop; pointer moves from stop when instrument is shaken.	No power supply. Transmitter or indicator plug connector contact damaged. Transmitter flexible wire broken. Poor contact between brushes and potentiometer working surface in transmitter.	Check supply line and remedy defect. Check wires and plug connectors receptacles of transmitter and indicator, remedy defect, if any. If flexible wire is broken solder it. In case of poor contact between brushes and potentiometer working surface proceed as follows: a) check contact pressure of brushes on potentiometer. b) Clean potentiometer surface.
2.	With instrument energized pointer is kept tight against [illegible] stop; pointer does not [illegible] indicator [illegible]	Wrong polarity of supply wires.	Check supply line and remedy defect.
3.	[illegible]	[illegible] or plug connectors [illegible]	Check line and remedy defect.

Declassified in Part - Sanitized Copy Approved for Release 2011/12/14 : CIA-RDP80T00246A064200070001-1

No.	Trouble	Probable Cause	Remedy
4.	When checking scale error, corrections have at the beginning of scale sign " + " in the middle - " 0 " and at the end - " + ".	Portion of coils resistance short circuited.	Check resistance by ohmmeter (unsolder coil wires) and rewind the coils.

Declassified in Part - Sanitized Copy Approved for Release 2011/12/14 CIA-RDP80T00246A064200070001-1

Declassified in Part - Sanitized Copy Approved for Release 2011/12/14 : CIA-RDP80T00246A064200070001-1

BAROSPEEDOGRAPH

Model K2-75

DESCRIPTION AND OPERATING INSTRUCTIONS

Declassified in Part - Sanitized Copy Approved for Release 2011/12/14 : CIA-RDP80T00246A064200070001-1

Declassified in Part - Sanitized Copy Approved for Release 2011/12/14 : CIA-RDP80T00246A064200070001-1

BAROSPEEDOGRAPH

Model K2-75

DESCRIPTION AND OPERATING INSTRUCTIONS

Declassified in Part - Sanitized Copy Approved for Release 2011/12/14 : CIA-RDP80T00246A064200070001-1

Declassified in Part - Sanitized Copy Approved for Release 2011/12/14 : CIA-RDP80T00246A064200070001-1

BAROSPEEDOGRAPH Model K2-75

DESCRIPTION AND OPERATING

INSTRUCTIONS

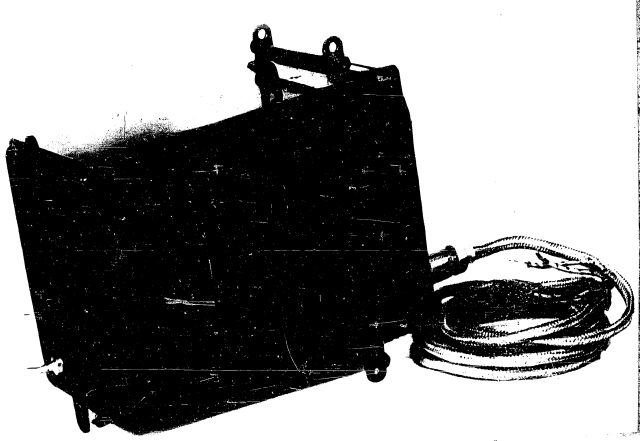

Fig.1. External View

Declassified in Part - Sanitized Copy Approved for Release 2011/12/14 : CIA-RDP80T00246A064200070001-1

Declassified in Part - Sanitized Copy Approved for Release 2011/12/14 : CIA-RDP80T00246A064200070001-1

K2-75 BAROSPEEDOGRAPH

I. PURPOSE

The K2-75 barospeedograph is designed for recording the air speed and barometric altitude of the aircraft.

II. COMPLETING

1. Barospeedograph K2-75	1 ea
2. Rubber shock absorbing cords	6 ea
3. Time marker remote starting button	1 ea
4. Connecting wire harness	1 ea
5. Description and operating instructions	1 copy
6. Certificate	1 copy

III. PRINCIPLE OF OPERATION

The principle of the instrument operation is based on expansion of corrugated metal diaphragms caused by change in pressure. To measure the speed, considered is the difference between Pitot pressure acting on the inside of the pressure gauge diaphragm and static atmospheric pressure acting on the outer surface of the diaphragm.

Aneroid (vacuum) capsules are used to measure the barometric altitude.

The expansion of speed diaphragm and the altitude aneroid capsule is transferred through the levered mechanisms to the recording hands.

Declassified in Part - Sanitized Copy Approved for Release 2011/12/14 : CIA-RDP80T00246A064200070001-1

Declassified in Part - Sanitized Copy Approved for Release 2011/12/14 : CIA-RDP80T00246A064200070001-1

IV. D E S I G N

The K2-75 barospeedograph consists of two independent systems which record the air speed and flying altitude of the aircraft. The location of the barospeedograph elements is shown in Fig.2 and 3.

The barospeedograph front panel is attached to a cast metal base, installed on which are the speed diaphragm (1) and altitude aneroid capsule (2), a bracket with a multiplying mechanism, clock mechanism with a drum and recording chart tape (3) and a heater.

To decrease the error caused by change in an ambient air temperature the barospeedograph is provided with bimetallic compensators. The "zero" compensator (5) is designed to retain the hand in the same initial position, with the temperature changing and the pressure constant. The "scale" compensator (7) is designed for maintaining the constant range of recording the same pressure differences with the temperature changing.

To eliminate backlash in the mechanism links, cylindrical springs (8) are provided. The instruments readings are recorded by the hands (9) in a smoked paper tape secured on the drum (10) by a tape-holder.

The mechanism is balanced by the weights (16).

The movable planks (15) are designed to adjust the hands movement parallel to the drum.

The recording line height is adjusted by changing the length of the arm (18) connected to the diaphragm by the rod (6), and the length of the arm (17) which transmits motion to the axle.

The drum is rotated by the clock mechanism at a constant speed.

The speed of the drum rotation is changed by the reduction gears (18, Fig.5).

Declassified in Part - Sanitized Copy Approved for Release 2011/12/14 : CIA-RDP80T00246A064200070001-1

Declassified in Part - Sanitized Copy Approved for Release 2011/12/14 : CIA-RDP80T00246A064200070001-1

The clock mechanism is started and stopped by turning the knob (11). Simultaneously the recording hands are brought to or taken from the chart.

Besides the hands recording the speed and altitude the instrument is fitted with the hand (12) to record the base line and to mark the time in flight, when necessary.

The hand is rigidly connected to the electromagnet (13) armature shaft and starts operating, with the electric circuit closed by the time marker remote starting button, furnished with the set.

To ensure the instrument reliable operation at low temperatures and to reduce its temperature errors, a heater (4) is mounted inside the instrument.

The electric heater is switched on by the bimetallic thermoregulator (14) installed on the instrument wall inner surface. Installed on the outerside wall of the instrument is a connection for dynamic pressure supply from a Pitot tube; the instrument casing is fitted with a connection for static pressure supplied by the Pitot tube.

To provide power supply to the instrument, on its wall outer surface a five-pin receptacle is installed.

To ensure the barospeedograph air tightness, placed in the groove on the instrument wall inner surface is a rubber gasket.

The instrument wall is tightly pressed to the casing by a latch. The latch is released (when opening the instrument) by pressing the latch button down. The instrument is closed by pushing it fully inside the casing and by pressing the handle down.

The barospeedograph wiring diagram is shown in Fig.4.

The wire labeled "1" is connected to the "negative", the wire labeled "2" - to the "positive", pin of the power receptacle - the wires labeled "3" and "5" - to the time marker button.

Declassified in Part - Sanitized Copy Approved for Release 2011/12/14 : CIA-RDP80T00246A064200070001-1

Declassified in Part - Sanitized Copy Approved for Release 2011/12/14 : CIA-RDP80T00246A064200070001-1

V. PRINCIPAL TECHNICAL DATA

1. Air speed measuring range ..... from 200 to 1,200 km./hr.

2. Barometric altitude measuring range..from 0 to 18,000 m.

3. Operating temperature range..... from +50 to -45°C.

4. Scale (calibrated) error is not more than ± 1 mm.

5. Instrument hysteresis, when checking without delay at max. reading points does not exceed the main scale error.

6. Instrument temperature error, during the instrument operation at an ambient air temperature of -45°C (with the heater on) and +50°C, does not exceed the main scale error.

7. Recorder line width without vibration is not more than 0.3mm.

8. The clock mechanism has three speeds of the drum at which it makes one revolution per 30,60 and 120 min. respectively, the clock mechanism error in any position being not more than ±1%.

9. The clock mechanism rating, when wound tight, is not less than 9 hours.

10. Supply voltage of the instrument electrical elements is 27 V ± 10% D.C.

11. Current drawn by the instrument electrical elements at 27 V does not exceed:

a) for electric heater 2A

b) for time marker ..... 0.3 A

12. The electric heater ensures inside the instrument the temperature not less than 0°C at an ambient air temperature of -45°C.

The electric heater is switched on automatically at a temperature of 15° ± 5°C.

13. The instrument casing is airtight:at a pressure difference of 100 mm.Hg. the pressure drop does not exceed 5 mm.Hg. for 3 min.The instrument is designed for operation in unpressurized cabins.

14. Weight ..... 4 kg.

15. Dimensions: 280 x 214 x 130 mm.

Declassified in Part - Sanitized Copy Approved for Release 2011/12/14 : CIA-RDP80T00246A064200070001-1

Declassified in Part - Sanitized Copy Approved for Release 2011/12/14 : CIA-RDP80T00246A064200070001-1

VI. OPERATING INSTRUCTIONS

A. PREPARING THE INSTRUMENT BEFORE FLIGHT

Before operating the instrument which was received from the Mfr's plant or was not used for a long period of time, examine the instrument and make sure that its readings correspond to the data given in the certificate.

Before installing the instrument in the aircraft proceed as follows:

1. Set the reduction gears for the required speed of the drum rotation in accordance with the diagram given in Fig.5.

2. Place a record chart of diagram or thick writing paper on the drum.

3. Uniformly smoke the drum record chart above a kerosene burner flame, next place the drum in the barospeedograph and wind the clock mechanism.

4. Check the hands initial position and make sure that they are tightly pressed to the drum. The hands should be so pressed to the drum that, with the instrument inclined up to 45°, they do not move from the chart.

5. Check that the clock mechanism is reliably started by turning the manual starting knob.

6. Check the operation of the time marker and the electric heater, having connected power supply plug to the instrument.

7. Place the barospeedograph in a casing and secure it with the latch. Calibrate the barospeedograph under normal conditions.

To calibrate the altitude part, the instrument is placed in a pressure chamber where vacuum is created in accordance with the hypsometric table.

Declassified in Part - Sanitized Copy Approved for Release 2011/12/14 : CIA-RDP80T00246A064200070001-1

Declassified in Part - Sanitized Copy Approved for Release 2011/12/14 : CIA-RDP80T00246A064200070001-1

To calibrate the air speed part, supplied to the diaphragm is a pressure corresponding to the air speed to be checked in accordance with the aerodynamic table.

In both cases the required pressure points are preset by consulting the barometer or the pressure gauge according to the calibration data given in the certificate.

The calibration points are recorded on the instrument record chart during the direct and reverse travel.

For using the deciphered record, it is recommended to plot an altitude and speed chart.

B. MOUNTING THE INSTRUMENT IN AIRCRAFT

1. Suspend the instrument by means of shock-absorbing cords.

2. Connect the static line from the Pitot tube to the pipe connection on the barospeedograph casing, and the dynamic line to the pipe connection on the instrument wall. Connect the instrument to the nearest joint of the system. Connect the barospeedograph using a hose, 3.5 x 10 mm.dia.

3. Check the Pitot tube system for airtightness.

4. Connect the power supply plug to the instrument.

C. OPERATING THE INSTRUMENT IN FLIGHT

Mark the required moments of time with the time marker hand by pressing the remote control button, supplied with the set.

Declassified in Part - Sanitized Copy Approved for Release 2011/12/14 : CIA-RDP80T00246A064200070001-1

Declassified in Part - Sanitized Copy Approved for Release 2011/12/14 : CIA-RDP80T00246A064200070001-1

D. OPERATING THE INSTRUMENT AFTER FLIGHT

1. Remove the drum, record on the chart the date, type and number of the aircraft, speed of the drum rotation and the name of the pilot.

2. Fix the recording, obtained on the tape in flight, in 5-10% alkaline solution in denaturated alcohol.

3. Dry the instrument.

E. DECIPHERING THE RECORD

4. Record the time and character of the instrument operation in the certificate.

5. Decipher the record made on the tape in flight.

To decipher the record, use a scale ruler and a measurer.

The ordinate value is read on the tape in mm. from the time marker recording line to the corresponding point of the curve.

The speed and altitude values are taken from the calibration tables.

Declassified in Part - Sanitized Copy Approved for Release 2011/12/14 : CIA-RDP80T00246A064200070001-1

Declassified in Part - Sanitized Copy Approved for Release 2011/12/14 : CIA-RDP80T00246A064200070001-1

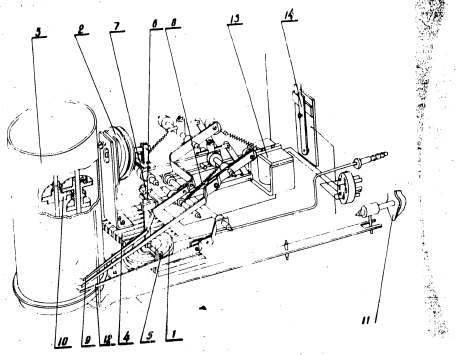

Fig.2. Kinematic Diagram

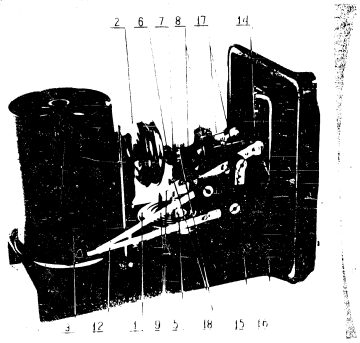

Fig.3. Barospeedograph (with casing removed)

1 - Airspeed diagram; 2 - altitude aneroid capsule; 3 - drum; 4 - electric heater; 5 - zero compensator; 6 - rod; 7 - scale compensator; 8 - springs; 9 - hands; 10 - reduction gear; 11 - clock starting knob; 12 - base line hand; 13 - electromagnet; 14 - thermoregulator; 15 - movable plank; 16 - weight; 17 and 18 - arms.

Declassified in Part - Sanitized Copy Approved for Release 2011/12/14 : CIA-RDP80T00246A064200070001-1

Declassified in Part - Sanitized Copy Approved for Release 2011/12/14 : CIA-RDP80T00246A064200070001-1

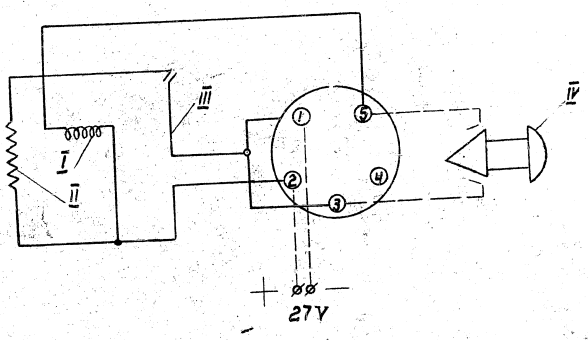

Fig. 4. Wiring Diagram

I - Electromagnetic marker
II - Electric heater
III - Bimetallic thermoregulator
IV - Time marker remote starting button.

Declassified in Part - Sanitized Copy Approved for Release 2011/12/14 : CIA-RDP80T00246A064200070001-1

Declassified in Part - Sanitized Copy Approved for Release 2011/12/14 : CIA-RDP80T00246A064200070001-1

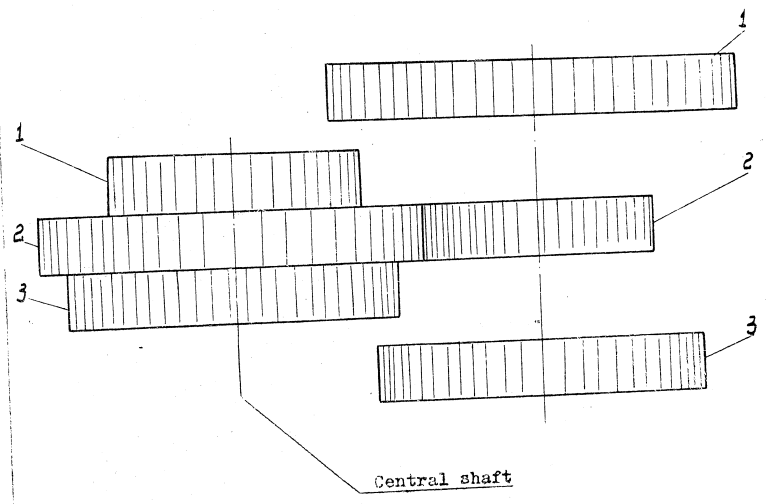

Gears engagement	1 revolution of central shaft
1-1	30 min.
2-2	120 min.
3-3	60 min.

Fig.5. Clock Mechanism Reduction Gear Speed Shifting Diagram

Declassified in Part - Sanitized Copy Approved for Release 2011/12/14 : CIA-RDP80T00246A064200070001-1

Declassified in Part - Sanitized Copy Approved for Release 2011/12/14 : CIA-RDP80T00246A064200070001-1

[redacted] WATTS

Model 432

Declassified in Part - Sanitized Copy Approved for Release 2011/12/14 : CIA-RDP80T00246A064200070001-1

Declassified in Part - Sanitized Copy Approved for Release 2011/12/14 : CIA-RDP80T00246A064200070001-1

SAFETY VALVE

Model 4381

Declassified in Part - Sanitized Copy Approved for Release 2011/12/14 : CIA-RDP80T00246A064200070001-1

Declassified in Part - Sanitized Copy Approved for Release 2011/12/14 : CIA-RDP80T00246A064200070001-1

SAFETY VALVE

Model 438Д

DESCRIPTION

INSTALLATION AND MAINTENANCE INSTRUCTIONS

Declassified in Part - Sanitized Copy Approved for Release 2011/12/14 : CIA-RDP80T00246A064200070001-1

Declassified in Part - Sanitized Copy Approved for Release 2011/12/14 : CIA-RDP80T00246A064200070001-1

C O N T E N T S

	Page
I. Purpose	3
II. Technical Data	3
III. Design	3
IV. Operation	6
V. Installation and Maintenance	8

Declassified in Part - Sanitized Copy Approved for Release 2011/12/14 : CIA-RDP80T00246A064200070001-1

Declassified in Part - Sanitized Copy Approved for Release 2011/12/14 : CIA-RDP80T00246A064200070001-1

I. PURPOSE

The safety valve model 438Д is designed to prevent damage to the aircraft pressurized cabin, should the cabin pressure regulator fail, and to permit emergency pressure release in the cabin.

II. TECHNICAL DATA

Pressure difference limited by valve.....325±10 mm.Hg.

Rate of air flow through safety valve at pressure difference of 325±10 mm.Hg. on the ground ..... 400-1500 kg./hr.

Air leakage through valve at pressure difference of 294 mm.Hg..... not more than 30 litres/min.

Hydraulic resistance of safety valve in return line at air flow rate.... of 400 kg./hr..... not more than 20 mm.Hg.

D.C. voltage..... 27 V ± 10%
Current ..... not more than 0.3A
Weight ..... not more than 1.7 kg.

III. D E S I G N

The design of the safety valve is given in Fig.2.

The casing (1, Fig.2) has a chamber incorporating the bellows(5) and seat (11) closely fitted to which is the diaphragm (3).

To attach the safety valve to the pressurized cabin flange, eight pins (13) are pressed in the casing.

Declassified in Part - Sanitized Copy Approved for Release 2011/12/14 : CIA-RDP80T00246A064200070001-1

Declassified in Part - Sanitized Copy Approved for Release 2011/12/14 : CIA-RDP80T00246A064200070001-1

Fig. 1. Safety Valve External View

Declassified in Part - Sanitized Copy Approved for Release 2011/12/14 : CIA-RDP80T00246A064200070001-1

Declassified in Part - Sanitized Copy Approved for Release 2011/12/14 : CIA-RDP80T00246A064200070001-1

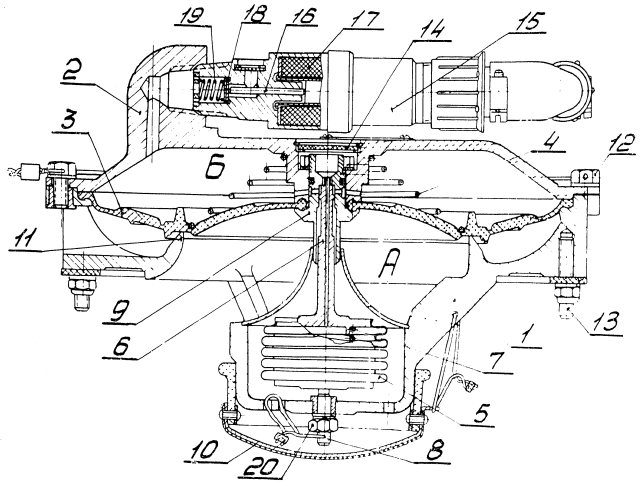

Fig. 2. Design of Safety Valve

1 - Casing; 2 - cover; 3 - diaphragm; 4 - spring; 5 - bellows; 6 - rod; 7 - spring; 8 - shank; 9 - bushing; 10 - screen; 11 - seat; 12 - bolt; 13 - pin; 14 - screen; 15 - solenoid valve; 16 - rod; 17 - coil; 18 - washer; 19 - spring; 20 - nut.

The cover (2) is fastened to the casing by 16 bolts (12).

The cover is provided with a threaded hole screwed in which is the solenoid valve (15). Placed between the cover (2) and diaphragm (3) is the spring (4) intended to press the diaphragm to the seat (11).

Declassified in Part - Sanitized Copy Approved for Release 2011/12/14 : CIA-RDP80T00246A064200070001-1

Declassified in Part - Sanitized Copy Approved for Release 2011/12/14 : CIA-RDP80T00246A064200070001-1

The bellows unit consisting of the bellows (5), spring (7), rod (6) and shank (8) is a sensing element which maintains the required pressure difference.

The bellows chamber communicates with atmosphere through the rod hole.

The adjusting nut (20) is intended for setting the bellows in the required mode of operation.

The screen (10) is designed to filter the air supplied to the bellows chamber. The screen (14) in the cover (2) protects the passages of the bushing (9) and rod (6) from contamination.

The bushing (9) is attached to the cover (2) and has two passages for discharging air to atmosphere; the bushing also serves as a guide for the rod (6).

The solenoid valve (15) is used to release the cabin pressure in emergency. The solenoid valve consists of the casing, coil (17), rod (16), spring (19), magnetic circuit and double-pin plug connector.

IV. OPERATION

The schematic diagram of the safety valve is given in Fig.3.

Air is supplied from the cavity A, which communicates with the cabin, to the cavity B through the clearances.

With the preset pressure difference between the cabin and atmosphere obtained, the diaphragm (3,Fig.3) is pressed to the seat (5) of the casing (1).

Declassified in Part - Sanitized Copy Approved for Release 2011/12/14 : CIA-RDP80T00246A064200070001-1

Declassified in Part - Sanitized Copy Approved for Release 2011/12/14 : CIA-RDP80T00246A064200070001-1

The bellows unit consisting of the bellows (5), spring (7), rod (6) and shank (8) is a sensing element which maintains the required pressure difference.

The bellows chamber communicates with atmosphere through the rod hole.

The adjusting nut (20) is intended for setting the bellows in the required mode of operation.

The screen (10) is designed to filter the air supplied to the bellows chamber. The screen (14) in the cover (2) protects the passages of the bushing (9) and rod (6) from contamination.

The bushing (9) is attached to the cover (2) and has two passages for discharging air to atmosphere; the bushing also serves as a guide for the rod (6).

The solenoid valve (15) is used to release the cabin pressure in emergency. The solenoid valve consists of the casing, coil (17), rod (16), spring (19), magnetic circuit and double-pin plug connector.

IV. OPERATION

The schematic diagram of the safety valve is given in Fig.3.

Air is supplied from the cavity A, which communicates with the cabin, to the cavity B through the clearances.

With the preset pressure difference between the cabin and atmosphere obtained, the diaphragm (3,Fig.3) is pressed to the seat (5) of the casing (1).

Declassified in Part - Sanitized Copy Approved for Release 2011/12/14 : CIA-RDP80T00246A064200070001-1

Declassified in Part - Sanitized Copy Approved for Release 2011/12/14 : CIA-RDP80T00246A064200070001-1

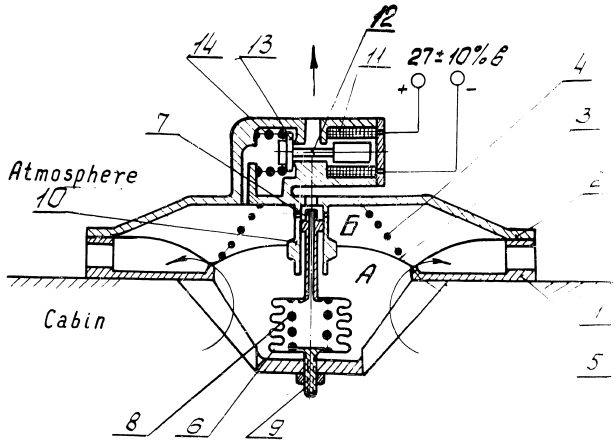

Fig.3. Schematic Diagram of Safety Valve

- housing; 2 - cover; 3 - diaphragm; 4 - spring; 5 - seat;
- bellows; 7 - valve; 8 - spring; 9 - shank; 10 - bushing; 11 - coil;
- core; 13 - washer; 14 - spring.

In case of excessive pressure difference the bellows (6) contracts, the valve (7) opens and the air from the cavity Б is discharged to atmosphere. In this case the air pressure in the cavity Б decreases. Due to pressure difference the diaphragm (3) overcomes the spring (4) force, expands towards the cavity Б and the air is discharged from the cabin to atmosphere through the opening.

Declassified in Part - Sanitized Copy Approved for Release 2011/12/14 : CIA-RDP80T00246A064200070001-1

Declassified in Part - Sanitized Copy Approved for Release 2011/12/14 : CIA-RDP80T00246A064200070001-1

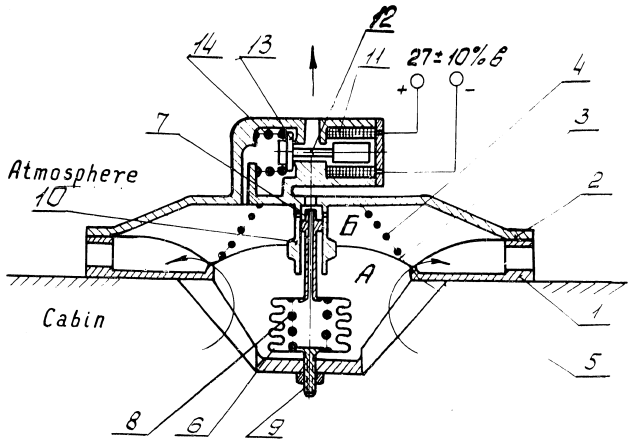

Fig.3. Schematic Diagram of Safety Valve

– Casing; 2 – cover; 3 – diaphragm; 4 – spring; 5 – seat;
– bellows; 7 – valve; 8 – spring; 9 – shank; 10 – bushing; 11 – coil;
2 – core; 13 – washer; 14 – spring.

In case of excessive pressure difference the bellows (6) contracts, the valve (7) opens and the air from the cavity Б is discharged to atmosphere. In this case the air pressure in the cavity Б decreases. Due to pressure difference the diaphragm (3) overcomes the spring (4) and expands towards the cavity Б and the air is discharged from the cabin to atmosphere through the opening.

Declassified in Part - Sanitized Copy Approved for Release 2011/12/14 : CIA-RDP80T00246A064200070001-1

Declassified in Part - Sanitized Copy Approved for Release 2011/12/14 : CIA-RDP80T00246A064200070001-1

As soon as the required pressure difference between the cabin and atmosphere is obtained again, the valve (7) by the action of the bellows (6) closes the opening through which the bushing passage communicates with atmosphere.

In case of a rapid descent, when atmospheric pressure may exceed the air pressure in the cabin the diaphragm (3) deflects from the seat (5) and atmospheric air enters the cabin.

If excessive pressure should be released from the cabin, the solenoid valve (15, Fig.2) is switched on.

In this case the core (12, Fig.3) moves, presses the washer (13) and, overcoming the spring (14) force, opens the hole for discharging the air from the cavity Б to atmosphere.

Due to pressure difference effecting the diaphragm (3), the latter deflects from the seat and the air is discharged from the cabin overboard.

V. INSTALLATION AND MAINTENANCE

Attach the safety valve outside the cabin in any position in the place where the static pressure of the air surrounding the valve is least affected by the flying speed.

Before installing the safety valve in aircraft check:

a) the valve surface for freedom from dents and other mechanical damages caused during transportation and storage;

b) for presence of locking.

Declassified in Part - Sanitized Copy Approved for Release 2011/12/14 : CIA-RDP80T00246A064200070001-1

Declassified in Part - Sanitized Copy Approved for Release 2011/12/14 : CIA-RDP80T00246A064200070001-1

During operation the safety valve does not require special maintenance, lubrication and adjustment.

If the safety valve is damaged, replace it with a new one.

Declassified in Part - Sanitized Copy Approved for Release 2011/12/14 : CIA-RDP80T00246A064200070001-1